Exhibited

This planning application is open for public comment until
07 July 2025

Reference no	**PLN-25-0055**
Site	**20 UNION STREET LONGFORD (WORKS WITHIN ROAD RESERVATIONS)**
Proposed Development	**Emergency Services - Ambulance Station (Longford SAP, Parking and Sustainable Transport Code, Attenuation Code, Flood-Prone Areas Hazard Code)**
Zone	**18.0 Light Industrial**
Use class	**Emergency Services**

Written representations may be made during this time to the General Manager;
mailed to PO Box 156, Longford, Tasmania 7301,
delivered to Council offices or
a pdf letter emailed to planning@nmc.tas.gov.au

(no special form required)

Received
08/05/2025

Exhibited

NORTHERN MIDLANDS COUNCIL

PLANNING APPLICATION

FOR BUILDINGS, WORKS AND CHANGE OF USE

(E.g. Residential houses, sheds, carports, retaining walls, visitor accommodation, commercial development, signage etc.)

Office Use Only:

The Proposal	
Description of proposal:	NEW AMBULANCE STATION
Driveway construction material:	BITUMINOUS ASPHALT

The Land	
Site address:	20 UNION STREET (CRNR UNION & GEORGE STREETS) LONGFORD
Title reference:	C/T: 203348 - 1
Existing buildings on site:	NIL - VACANT
Existing use of site:	NA - VACANT

Applicant justification of any variation/discretion to the *Tasmanian Planning Scheme – Northern Midlands*

FOLIO PLAN

RECORDER OF TITLES

Issued Pursuant to the Land Titles Act 1980

Exhibited

Tasmanian Government

OWNER:

FOLIO REFERENCE: VOL 2240 FOL 2

GRANTEE:
PART OF 43A-2R-25P GTD TO
JOHN WARD GLEADOW & HENRY JENNINGS.

PLAN OF TITLE

LOCATION:

TOWN OF LONGFORD

FIRST SURVEY PLAN No: 1/27 WES

COMPILED BY: LTO

SCALE 1:1000 LENGTHS IN METRES

Registered Number

P.203348

APPROVED 14 JUN 2022

Recorder of Titles

NEW PLAN
REDRAWN FOR
OFFICE CONVENIENCE

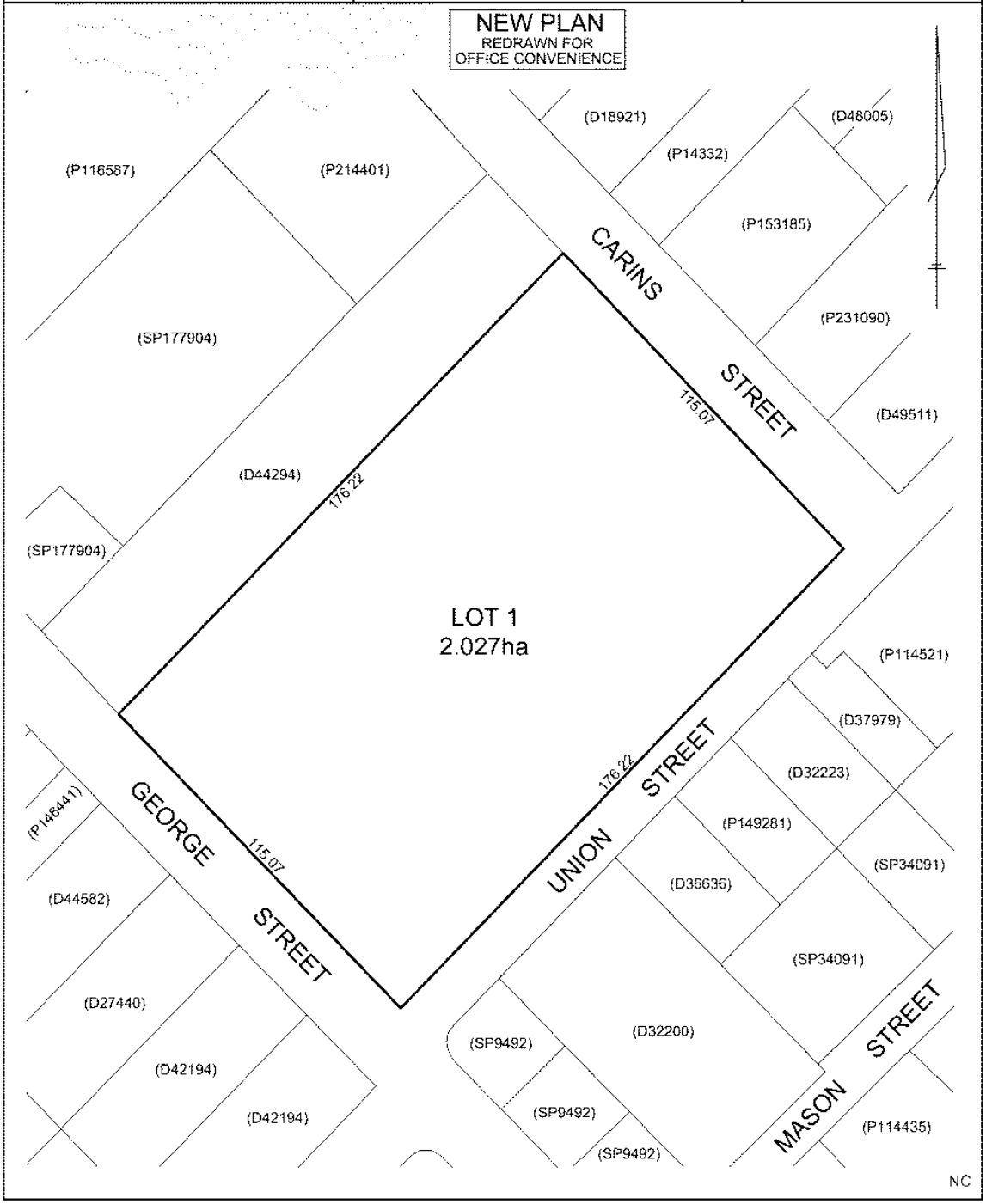

Exhibited
Received
06/05/2025

Proposed Development
Application for an Emergency Services Facility: Ambulance Station

20 Union Street
Longford Tasmania

Ambulance Tasmania:
Department of Health and Human Services

Prepared by: **Michael Ball**
BSc Hons Grad Dip Urban and Regional Planning
Consulting Town Planner

Received
06/05/2025
Exhibited

1. Proposal

1.1 Archadia Architects on behalf of Ambulance Tasmania propose an Emergency Services installation in the form Ambulance Station on part of the property known as 20 Union Street Longford. Whilst ingress is provided off Union Street emergency vehicle egress is onto George Street with the building providing its front facade onto that street.

1.2 The proposal provides for a single structure constructed of concrete, iron and steel cladding. The development includes site works that will create a pad upon which the structure will be located, taking the building above predicted flood levels.

1.3 Proposal plans prepared by Archadia Architects will be included in the development application package. Those plans give accurate detail of the internal layouts and external appearance of the proposed building and associated carparking and as such they are not detailed here other than to say the building is purpose designed to suit the needs of an emergency services building and the site itself.

1.5 The subject site is in the ownership of the Crown and an authority to lodge the application will be provided to Council.



FIGURE 1: Subject site viewed from the southern corner

2. Site/Existing Land Use

2.1 The subject site is part of a rectangular shaped area of land fronting Union George Streets and Carins Streets Longford. The proposal is only reliant on Union and George Streets. The location and an overview of the site and surrounding area are shown in Figure 2 below.

2.2 The site is a part of an allotment also known as P.203348 has an area of 2.027ha. There are no endorsements on the title that impact on the proposal. Only a portion of the existing title

Received
06/05/2025
Exhibited

is proposed for the current application. A copy of the title is included as part of the application package. A subdivision of the balance area will follow in due course.

2.3 The vacant site is relatively flat and is predominantly covered in grass species.

2.4 The site is immediately joined by residential developments consistent with the zone. Land to the south east on the opposite of Union Street is residential. The predominant use of land immediately adjoining the site is light industrial. An overview of the character of the surrounding area is provided in Figure 2 below.

3. Hydraulic and Other Infrastructure

3.1 The site is serviced by water and effluent disposal systems under the control of Tas Water.

3.2 Stormwater disposal from the proposed building and hardstand areas will be discharged into the existing Northern Midlands Council stormwater system.

3.3 The site is served by Union and George Streets constructed to urban standards and under the control and maintenance of the Northern Midlands Council.

3.4 Power and telecommunications services are provided to the site.



FIGURE 2. Location and settlement pattern

Received
06/05/2025
Exhibited

4. PLANNING DIRECTIONS AND CONTROLS

4.1 The site falls within the **Light Industrial** zone of the **Northern Midlands Local Provisions Schedule** of the **Tasmanian Planning Scheme**. (the scheme) See Figure 3 below. The site is subject to three overlays as follows

- ❖ Safeguarding of Airports
- ❖ Attenuation Code Area 9
- ❖ Longford Specific Area Plan NOR 6.0

4.2 There are no **Local Area Objectives** applicable to the site.



FIGURE 3. Zoning of Property **Light Industrial** (the Tasmanian Planning Commission May 2025)

4.3 Part **14.1** of the Scheme headed **Zone Purpose** provides as follows

The purpose of the **Light Industrial** zone is:

18.1.1 To provide for manufacturing, processing, repair, storage and distribution of goods and materials where off site impacts are minimal or can be managed to minimise conflict with, or unreasonable loss of amenity to, any other uses.

18.1.2 To provide for use or development that supports and does not adversely impact on industrial activity.

4.4 **Table 6.2** headed **Use Classes** classifies the proposed development as **Emergency Services** defined as follows (my underlining)

use of land for police, fire, ambulance and other emergency services including storage and deployment of emergency vehicles and equipment. Examples include ambulance station, fire station and police station

Received
06/05/2025
Exhibited



FIGURE 4: George Street frontage

4.5 **Table 18.2** places the Emergency Services use class in the **Permitted** use section without any qualifications. Not with standing this classification **Specific Area Plan NOR 6** classifies the proposed use as **Discretionary.**

5. ASSESSMENT OF THE PROPOSED DEVELOPMENT AGAINST THE USE and DEVELOPMENT STANDARDS.

5.1 **Part 18.3** of the Scheme provides use standards for all developments within the Light Industrial zone. In this instance assessment is provided as follows.

- **18.3.1 A1-**Exclusion for Emergency Services applies
- **18.3.1 A2-**Only security lighting is provided and all baffled to be inward facing consistent with AS1158.1.
- **18.3.1 A3-**Exclusion for Emergency Services applies

5.2 Part 18.4 of the Scheme provides the development standards. In this instance assessment is provided as follows.

- 18.4.1 A1 is fulfilled as the building height is less than 10m being 7.870 above existing ground level.
- 18.4 1 A2 is fulfilled as the building is more than 10 metres from a residential zone
- 18.4.2 A1 is fulfilled as the building is setback in excess of 5.5 metres on both frontages.
- 18.4.2 A2 is not relevant as there is no adjoining residential land
- 18.4.2 A3 is not relevant as no external systems are proposed
- 18.4.3 A1 is not relevant as there is no adjoining residential zone
- 18.4.4 A1 is not relevant as no external storage or display is proposed
- 18.4.5 A1 is fulfilled as landscaping of both road frontages is proposed and shown.

All of the relevant Acceptable Solutions of the development standards are fulfilled.

Received
06/05/2025
Exhibited



FIGURE 5. The Union Street frontage and residences opposite

5.3 The site is affected overlain by the Safeguarding of Airports overlay. It is submitted that the proposal is exempt under the provisions of part C16.4.1 of the local provisions Schedule being below the AHD specified for the site.

5.4 The development site falls within the area affected by Attenuation Code (Area 9). It is submitted that the code is not applicable to the proposed use.

5.5 The development site falls within the Specific Area Plan NOR 6.0. Whilst the Plan has the immediate effect of making the proposed use discretionary it is submitted that the plan has no further effect on the proposed use.

5.6 A Traffic Impact Assessment has been carried out by RJK Consulting Engineers. It addresses the **Parking and Sustainable Transport Code** and no further comment is necessary here other than to say the proposal fulfills the relevant Acceptable Solutions.

5.7 It is understood that flood mapping has identified the site as potentially subject to flooding. A flood assessment report has been carried out by RJK Consulting Engineers and is included in the development application package. The proposed design has been prepared in conjunction with that assessment including the proposed pad upon which the building will be constructed. I understand that in times of a flood prediction vehicles will be relocated away from the predicted flood area ensuring continued utility.

5.8 By way of comment the noise and light from ambulances is very limited, advice from current drivers is to the effect that sirens are not used until out onto the highway and usually clear of the town area, if necessary, at all.

6.0 PLANNING COMMENT

6.1 An ambulance station on vacant land. The use is classified as Emergency Services and whilst permitted in the prevailing Light Industrial zone it becomes discretionary under the overlaying Specific Area Plan NOR 6.

6.2 The proposal fulfills all of the relevant Acceptable Solutions applicable to the development.

Received
06/05/2025
Exhibited

6.3 The proposed structure is architect designed to suit the purpose. Experience elsewhere has shown them to be not only functional for the health and safety of the community but also a valuable contribution to the townscape. It will certainly not adversely affect the amenity of the area.

6.4 In my opinion the proposal is consistent with the purpose of the light industrial zone and further it primarily serves the local community. Further I believe it is consistent with the purpose of the Specific Area plan and the objectives of the planning scheme more generally.

6.5 The proposal, in my opinion, is an appropriate one for the site and merits the application of the discretion available to Council and therefore approval.

Received
06.06.2025

Exhibited

WSUD/MUSIC REPORT

Report prepared for:

20 Union St
Longford TAS 7301

Title Reference: 203348/1

Property Id: 737345

Issue: P01

Date: 6th June 2025

Project: 24/25 TAS 082

CONTACT

RJK CONSULTING ENGINEERS

Phone:
0400 642 462

Address:
Po Box 128
Prospect TAS 7250

Email:
mail@rjkconsultants.com.au

Received
06.06.2025

Exhibited

Report Amendment Register

Issue Ref	Amended Section(s)	Issue / Amendment Details	Author(s)	Reviewer	Date

REVISION/ISSUE AUTHOR:



Risden Knightley BE (Civil)
Ass Dip Civil Eng, FIEAust, CC 2539X

Received
06.06.2025
Exhibited

Introduction

This report is in response to Northen Midlands Council's policy for Water Sensitive Urban Design. Calculations have been undertaken based on that document and modelling through the program MUSIC.

Project site

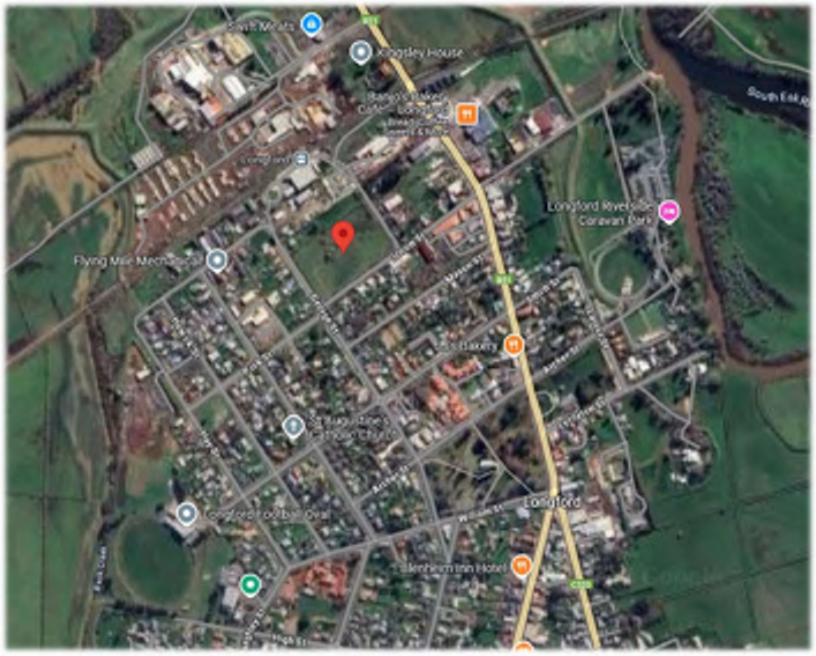

Figure 1: Existing Site Conditions

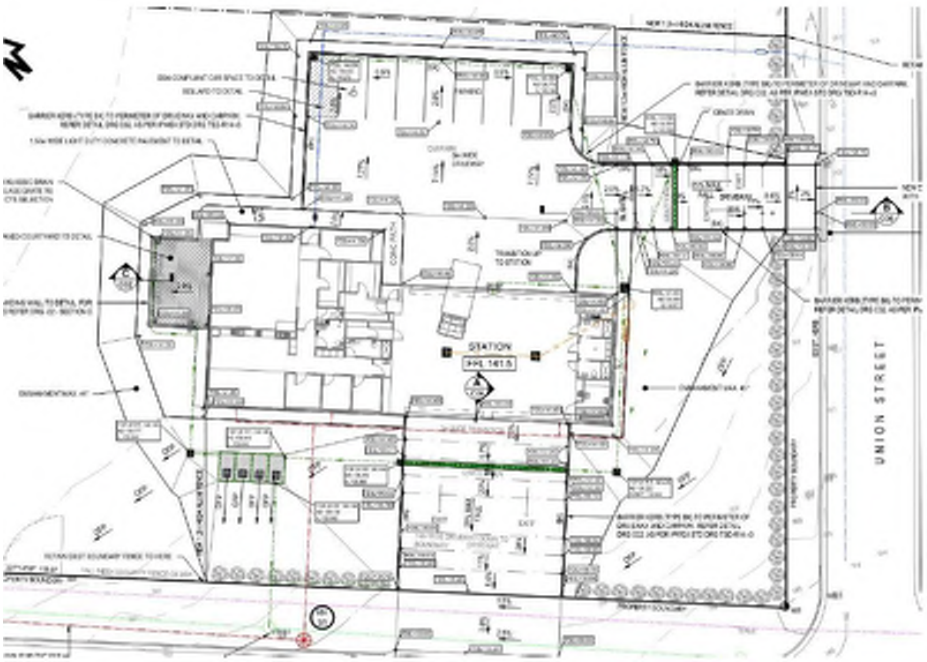

Figure 2: Proposed Development

Received
06.06.2025
Exhibited

MUSIC Inputs

10 Year rainfall template: Launceston Airport, 1999-2009 6-minute

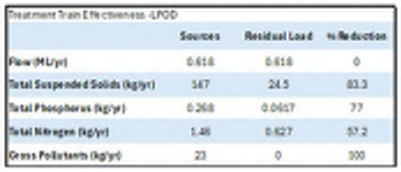

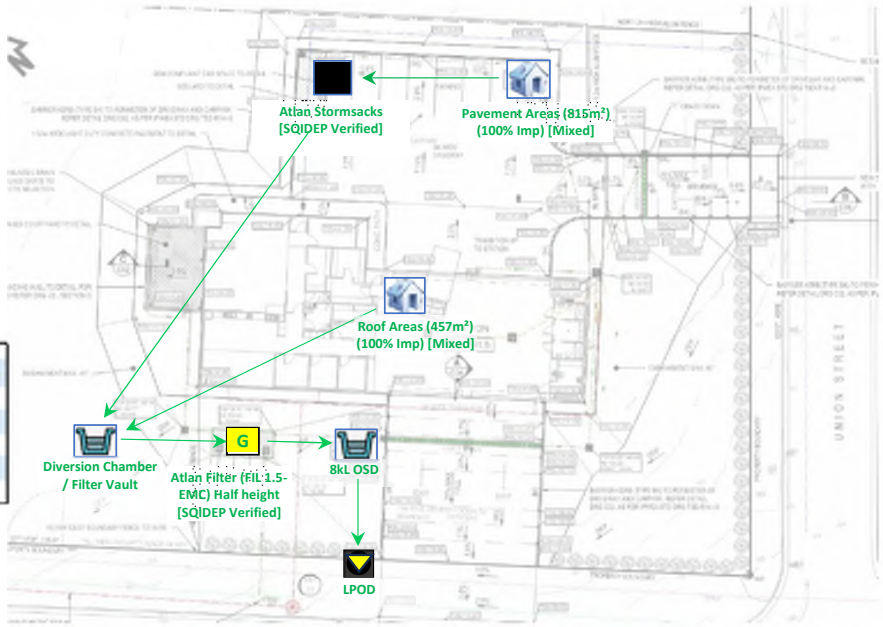

Figure 3: MUSIC Model Configuration

Catchment Details

Catchment	Size (m²)	Imperviousness (%)
Pavement Areas	815	100
Roof Areas	457	100

Treatment Details

Atlan Stormsack

System Type: GPT (Gross Pollutant Trap)

Treatment Type: Primary

Model: STS.6060.C1

Treatment Flow Rate: 25L/s

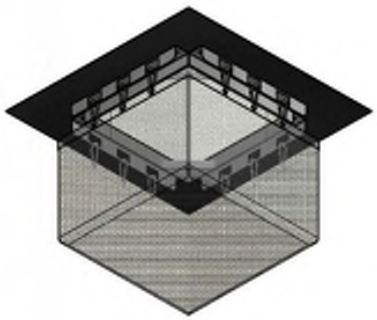

Pollutant Removal Rates

Pollutant	TSS	TP	TN	GP
Input (mg/L)	1000	5	50	15
Output (mg/L)	550	2.65	37.5	0

Received
06.06.2025

Exhibited

Atlan Filter

System Type: Filter

Treatment Type: Tertiary

Model: FIL-1.5 (Half Height)

Treatment Flow Rate: 1.5L/s

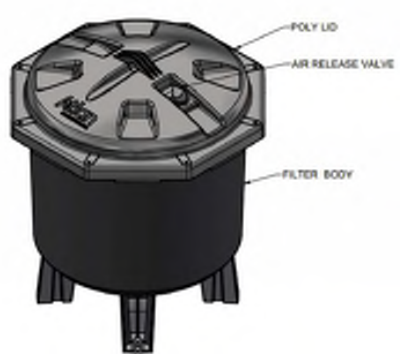

Pollutant Removal Rates

Pollutant	TSS	TP	TN	GP
Input (mg/L)	1000	10	50	100
Output (mg/L)	150	2.6	27.5	41

MUSIC Results

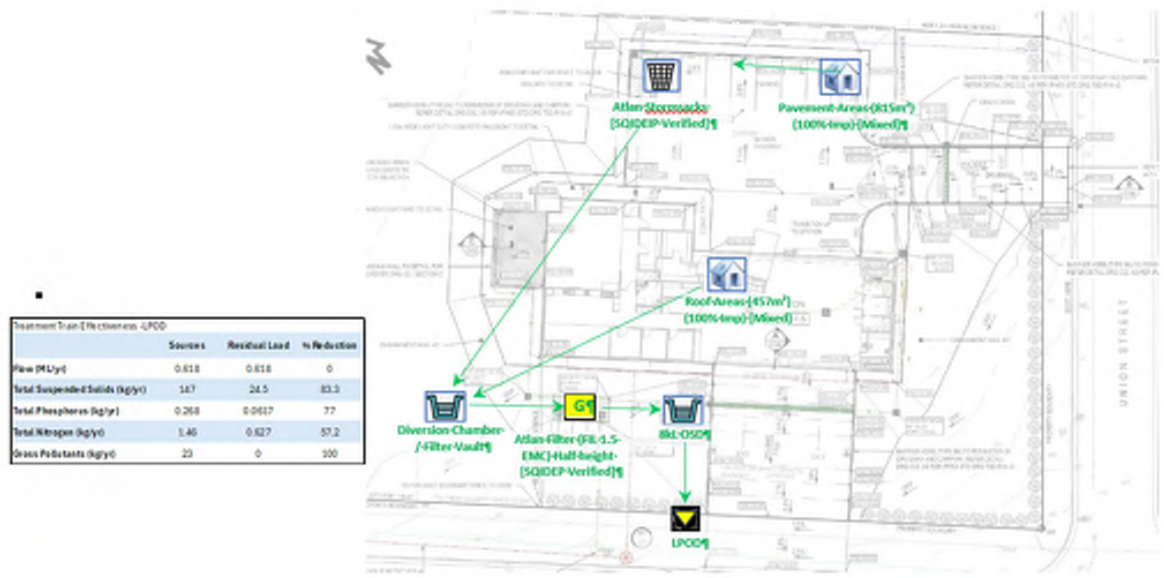

Figure 4: MUSIC Model Results

Pollutant	Sources (kg/yr)	Residual Load (kg/yr)	Reduction (%)	Reduction Target (%)
Flow (ML/yr)	0.618	0.168	**0**	0
Total Suspended Solids	147	24.5	**83.3**	80
Total Phosphorus	0.268	0.0617	**77**	45
Total Nitrogen	1.46	0.627	**57.2**	45
Gross Pollutants	23	0	**100**	70

Exhibited

This report is copyright and is to be used only for its intended purpose by the intended recipient and is not to be copied or used in any other way. The Report may be reloaded on for its intended purpose within the limits of the following disclaimer.

This study, report and analysis have been based on the information available to RJK Consulting Engineers at the time of preparation. RJK Consulting Engineers accepts no responsibility for the report and its conclusions to the extent that the information was sufficient at the time of preparation. RJK Consulting Engineers does not take any responsibility for errors and emissions due to incorrect information or information not available to RJK at the time of preparation of the study, report or analysis.

Received
06.06.2025

Received
28.05.2025

Exhibited

RJK CONSULTING ENGINEERS

TRAFFIC IMPACT ASSESSMENT REPORT

Report prepared for:

The Crown – Department of Health
New Ambulance Station
20 Union Street
Longford TAS 7301

CONTACT

RJK CONSULTING ENGINEERS

Phone:
0400 642 462

Address:
Po Box 128
Prospect TAS 7250

Email:
mail@rjkconsultants.com.au

Received
28.05.2025

Exhibited

Document Contact

RJK Consulting Engineers
ABN: 71 162 701 528

Risden Knightley
BE (Civil), Ass Dip Civil Eng, FIEAust, CC 2539X

Telephone: 0400 642 462

Document Information

Client:	Department of Health
Project Reference:	24/25 TAS 082
Date:	27th May 2025
Version Number:	V4
Effective Date	27th May 2025
Date Approved:	27th May 2025

Document History

Version	Effective Date	Description of Revision	Prepared by:	Reviewed by:
V2	21/03/2025	Deletion of residence	Risden Knightley	Cheryl Banks
V3	02/05/2025	Change to site plan	Risden Knightley	Cheryl Banks
V4	27/05/2025	Response to C2.6.1	Risden Knightley	Cheryl Banks

© RJK Consulting Engineers. Copyright in the whole and every part of this document belongs to RJK Consulting Engineers and may not be used, sold, transferred, copied or reproduced in whole or in part in any manner or form or in or on any media to any person other than by agreement with RJK Consulting Engineers.

This document is produced by RJK Consulting Engineers solely for the benefit and use by the client in accordance with the terms of the engagement. RJK Consulting Engineers does not and shall not assume any responsibility or liability whatsoever to any third party arising out of any use or reliance by any third party on the content of this document.

Received
28.05.2025
Exhibited

TABLE OF CONTENTS

CONTACT i

Table of Contents iii

1. Introduction 4
   - 1.1 Overview 4
   - 1.2 Scope of Works 4
   - 1.3 Report Objectives 4
   - 1.4 Reference Documents & Data Sources 5
2. Site Description 6
   - 2.1 Site Location & Description 6
3. Proposed Development & Planning Scheme 7
   - 3.1 Development Details 7
   - 3.2 Council Planning Scheme 7
4. Existing Conditions 8
   - 4.1 General Transport Network 8
   - 4.2 Traffic Activity & Generation 14
   - 4.3 Crash History 14
   - 4.4 Road Safety Review 14
5. Traffic Assessment 16
   - 5.1 General 16
   - 5.2 Access Design 16
   - 5.3 Parking Assessment 16
   - 5.4 Sight Distances 16
   - 5.5 Road Safety and Traffic Service 17
   - 5.6 Surrounding Road Impacts 17
6. Planning Scheme Response 18
7. Summary 23
8. Regulatory Feedback 24
   - 8.1 Council Feedback 24
   - 8.2 DSG Feedback 24
9. Conclusion 25

Appendix

Civil Plans

Received
28.05.2025
Exhibited

1. Introduction

1.1 Overview

RJK Consulting Engineers has been commissioned by Archadia Architecture on behalf of The Crown – Department of Health to undertake a Traffic Impact Assessment (TIA) relating to the proposed ambulance station development at 20 Union Street, Longford. Specifically, this TIA addresses the access provision of the proposed development in addressing Codes C2.0 and C3.0. The proposed layout is provided in this report for reference.

The proposed development is located within the Northern Midlands Council Local Government Area (LGA) and is subject to their relevant planning controls. This TIA will form part of the Development Application and be submitted for proposal to Northern Midlands Council. It has been prepared in accordance with the Department of State Growth (DSG) guidelines.

1.2 Scope of Works

A concept design layout has been prepared by Archadia Architecture and is included in the Appendix for reference. The nature of the development requires a TIA to be undertaken, and the following information has been prepared to address traffic related aspects and identify any potential impacts that may affect the progression of the development.

The objective of this report is to evaluate the impact of traffic generated by the project, its associated impact on the surrounding road network, as per Code C2 & C3 as depicted by the planning scheme. RJK's scope of works for this study includes any issues arising from the new access points, in particular:

- That the level of use, number of vehicles and layout maintains an acceptable level of safety;
- That the car parking and manoeuvring spaces are convenient, safe and efficient to use;

It will also demonstrate:

- Impact on the surrounding road network;
- Any recent crash statistics in the vicinity;
- Any changes required to accommodate the additional traffic.

1.3 Report Objectives

The objective of this report is to evaluate the impact of traffic generated by the project. It will also aid in the planning and design of sustainable development proposals by taking into consideration:

- Safety and capacity;
- Equity and social justice;
- Efficiency and the environment.

RJK's objectives for this study include:

- Review and collate background documents in relation to the development;
- Assessing access performance in accordance with Codes C2 & C3;
- Identify any mitigating measures required as a result of the proposal.

Received
28.05.2025
Exhibited

1.4 Reference Documents & Data Sources

RJK Consulting Engineers have been provided by Northern Midlands Council and the client relevant information on the development. These detail an outline of the works, and that the development generally proposes no significant change to the existing traffic arrangements.

The following documents have been referenced as part of this study:

- www.THELIST.tas.gov.au;
- DSG 'Traffic Impact Assessment (TIA) Guidelines';
- DSG Tasmanian State Road Hierarchy;
- Tasmanian Planning Scheme;
- Northern Midlands Local Provisions Schedule;
- Transport NSW Guide to Transport Impact Assessment 2024;
- Transport and Main Roads Road Planning and Design Manual – Edition 2; Vol 3;
- Various Austroads publications.

Received Exhibited
28.05.2025

2. Site Description

This chapter reviews the existing road network and transport conditions surrounding the proposed development site.

2.1 Site Location & Description

The site is located on the north-western side of Union Street on a parcel of land that borders George Street to the south-east and Carins St to the north-east. The site is a vacant allotment, zoned Light Industrial and is approx. 20,194 m² in size. The site is surrounded by residential developments. The site falls within the Northern Midlands Local Provision Schedule – NOR-S6.0 Longford Specific Area Plan. The subject site is identified in **Figure 1.**

Figure 1 - Site Location



Received
28.05.2025
Exhibited

3. Proposed Development & Planning Scheme

3.1 Development Details

The proposal is to construct a new ambulance station consisting of ambulance bays, ancillary stores, office facilities, lunchroom, training room, restroom facilities, and parking on a section of the site in the south-western corner. The day to day vehicle access point and ambulance movements from the site will be separate and as such this traffic impact assessment has been based on these requirements.

Access for both vehicle movements and pedestrians into the site will be from Union Street, whilst the ambulance exit from site will be on George Street. The new access will need to meet the Austroads Standards in terms of construction, will need to be constructed in accordance with IPWEA LGAT municipal standard drawings in terms of dimensions, etc. and will need to be a level sealed junction of suitable material, in keeping with the urban road profile. These standard drawings can be found on the LGAT website as reference.

The interface at the roadside edge appears ideal for the proposed development and alignments can easily be matched in.

It is noted that both Union Street and George Street can easily accommodate additional vehicle movements arising from this development, based on likely low vehicle numbers existing and generated additional (with satisfactory manoeuvre of existing arrangements during site visits).

Figure 2 - Proposed Layout



3.2 Council Planning Scheme

The proposed development involves land currently zoned Light Industrial in accordance with the Northern Midlands Council Local Provision Schedule.

Received
28.05.2025
Exhibited

4. Existing Conditions

4.1 General Transport Network

The local transport system consists of the following roads:

- Union Street;
- George Street;
- Park Street; and
- Wellington Street.

These roads are discussed in detail in the following sections.

Figure 3 – Local Road Network



4.1.1 Union Street

Union Street is a council owned road that runs from the South Esk River boat ramp in the north-east and traverses south-west intersecting with Able Tasman Avenue, Wellington Street and Carins Street. The road terminates at the junction with George Street, approx. 148m to the south-east of the crossover servicing the ambulances. The road from the junction of Wellington Street to the junction with George Street is urban in nature, single lane each way and has an average width of approx. 7.5 metres. The two-coat road surface is in good condition with the road alignment having a downward grade of approx. 5% in the vicinity of the crossover to the proposed development.

Received
28.05.2025
Exhibited

There is kerb and channel on both sides of the road, a footpath on the eastern side of the street and there is street lighting present. Line marking is limited to the junction with Wellington Street and the junction with George Street where there are also give-way signs.

The street is a mix of residences and light industry, the Longford Bowls Club and Men's Shed, Union Street provides access to the Beachfront Longford Hotel and serves as a local access road for the surrounding road network. Default speed limit of 50km/hr applies to Union Street.

4.1.2 George Street

George Street is a council owned road that travels from Gay Street in the north-west to Pakenham Street in the south-east, intersecting with Union Street, Park Street, Mason Street, Smith Street, Archer Street and William Street. The street is urban in nature, with a two-coat sealed width of approx. 12.5m for the majority of the street with the road narrowing to approx. 7.5m from the junction with Union Street to the Gay Street junction.

There is kerb and channel on both sides of the road with street lighting present. A foot path is located on the south-western side of the road from just near the junction with Gay Street to the junction with Smith Street. From this point on the footpath alternates between both side of the road.

The street mainly consists of residential developments with an area of light industrial at the intersection with Gay Street and in between the Smith Street intersection and the Pakenham junction there is the Northern Midland Council building and car park, the Longford Police Station, a cemetery and church and a Masonic Hall.

Default speed limit of 50km/hr applies for George Street.

4.1.3 Park Street

Park Street is a council owned road that traverses from George Street in the north-east to Hay Street in the south-west, intersecting with Goderich Street and Howick Street. The street is urban in nature with a two coat width of approximately 9.5m. There is kerb and channel on both sides of the road with street lighting present and a foot path is located on the southern side of the road

The street mainly consists of residential developments along with the Northern Midland Works Depot and the Longford Catholic Cemetery is located at the southern end of the street.

Default speed limit of 50km/hr applies for Park Street

4.1.4 Wellington Street

Wellington Street traverses from Tannery Road South in the north-west to the junction with Marlborough Street serving as the main throughfare through the township and shopping precinct of Longford. At this point Wellington Street veers to the right and Marlborough Street continues and serves as the main thoroughfare. Wellington Street continues in a south-easterly direction to the junction with Brickendon Street where the road then becomes Woolmers Lane.

Wellington Street provides the main connection to the Midland Highway and Bass Highway via Tannery Road South and Illawarra Road. The road is urban in nature in the vicinity of the junction with Union Street with kerb and channel on both sides of the road with the exception of a 30 metre section to the south of the junction on the south-western side. The road is single lane each way and a two-coat sealed average width of approximately 13.5 metres in the vicinity of the junction with Union Street.

The road surface is in average condition and there is a broken centre line in the vicinity of the junction with Union Street. The width of the road allows for parking on both sides of the street and street lighting is present.

Default speed limit of 50km/hr applies for Wellington Street.

Received
Exhibited
28.05.2025

Figure 4 – Proposed general access location on Union Street.



Figure 5 – Looking left along Union Street from the proposed general access location.



Exhibited

Figure 6 – Looking right along Union Street from the proposed general access location.

Received
28.05.2025



Figure 7 – Proposed ambulance access location on George Street.



Exhibited

Figure 8 - Looking left along George Street towards the proposed ambulance access location and the junctions with Union Street and Park Street.

Received
28.05.2025



Figure 9 – Looking left along George Street from the junction with Union St.



Exhibited

Figure 10 – Looking south from the junction of Union / George Streets at the junction with Park Street / George Street.

Received
28.05.2025



Figure 11 – Looking right from Union Street along George St towards the proposed ambulance access location.



Exhibited

Figure 12 – Looking north-east towards the junction of Union / George Streets from Park Street junction with George Street.

Received
28.05.2025



4.2 Traffic Activity & Generation

No historic traffic count data is available for either Union Street , George Street or Park Street in the vicinity of the site.

The probability of increased off site impacts is relatively small due to the nature of the development and the exiting arrangements of vehicles directly onto Union Street under emergency lights. As such a detailed assessment of external site impacts, beyond the scope of the new development property accesses and SISD, is not likely required at this time by Council.

Figures for transport and emergency vehicle egress were obtained from Ambulance Tasmania. These figures are based on anecdotal evidence of call outs and change over. These figures identify that on average the station anticipates approx. 10 vehicle movements per day (24 hour period), with the development proposing to employ 3 staff members. Additionally, as the location does not have any direct connection with footpaths or public transport, this suggests some 100% car use with average car occupancy of 2.

It is considered that the adopted traffic generation rate is a suitable generation rate for the land uses permitted for the development. Based on this small volume of additional traffic generated by the new development, along with an inspection of the road and surrounding areas, it is identified that the general operations of the street, as currently operating, will not have any noticeable level of service loss.

4.3 Crash History

DSG advised that there were no reported crashes in the vicinity of the development for the last 5 years.

Exhibited

4.4 Road Safety Review

Based on sight observations and the information regarding crash history, the road network in this area appears to function satisfactorily, and provides appropriate width and manoeuvrability based on road hierarchy and the limited traffic numbers.

Due to the development not being seen as a major contributor resulting in a dramatic increase in traffic volumes being generated, further off-site impacts are not considered.

Received
28.05.2025

Received
28.05.2025
Exhibited

5. Traffic Assessment

5.1 General

The proposed development is one which is purely driven by accident demand and the requirement for such response by the vehicles based at the station. As all general traffic will enter and exit through a dedicated entrance and emergency vehicles through a dedicated exit, this is considered adequate under the scheme and will have minimal impact on the surrounding road system.

All movements through the site for emergency vehicles will be directly onto George Street and will be in a primary left outwards movement. Note as exit will be under lights and possible sirens, traffic control is automatically assumed by the rule of giving way to emergency vehicles under state law.

Code C2.6.3 states that “The number of accesses provided for each frontage must: (a) Be no more than 1; or (b) No more than the existing number of accesses, whichever is the greater.”

The proposed development provides a total of one access on Union Street for general traffic and one access on George Street for ambulances.

5.2 Access Design

The proposed development provides adequate turning areas. As Table C2.1 requires 1 space per employee and the proposal is for 3 employees, Table C2.2 requires an access width of not less than 3 metres. The proposed development access is significantly wider at 5.5 metres and therefore complies to the acceptable solutions.

5.3 Parking Assessment

Per Table C2.1 space per employee required. Design shows 14, therefore complies with acceptable solution. One space will be allocated to accessible parking as per scheme requirements.

5.4 Sight Distances

SISD is the minimum sight distance which should be provided on the road at any intersection. A sight specific assessment on the site was undertaken to review sight distance with consideration of Sight Distance as per AS 2890.1. Under section 3.2.4 of AS 2890.1 SISD is indicated by either the posted speed limit or the 85th percentile of vehicle speed along the access route to the site. As noted above Union Street and George Street operate with a 50km speed limit. This speed limit yields a visibility distance of 40m for domestic property access.

As noted from measurements taken on site and photos SISD is achieved for the general access. Given the emergency vehicles will be exiting under lights and possible sirens further safety is offered. As such the driveways meets the acceptable criteria for SISD and therefore satisfy AS 2890.1 requirements. Refer to *Table 1*.

Table 1 - Site SISD

Driveway	SISD Left	SISD Right
Ambulance access – George Street	>200m (to the junction with Smith Street)	>160m (to the junction with Gay Street)
General Access – Union Street	>200m (to junction with Wellington Street)	38m (to the junction with George Street)

Received Exhibited
28.05.2025

5.5 Road Safety and Traffic Service

Due to the sight distance deemed to be met with regards to the Austroads guidelines, road safety appears not to be compromised by the establishment of the driveways. Traffic service is believed to be adequate with the existing infrastructure based on the low traffic volumes.

5.6 Surrounding Road Impacts

The assessment of the impact of the proposed development on the street network has been undertaken. Due to the limited additional traffic being generated from the development, volumes are not considered material and would have limited impact on the wider road network. As such an assessment of additional road network parameters beyond the site are outside the formal responsibility of this report.

Received
Exhibited
28.05.2025

6. Planning Scheme Response

The Northern Midlands Council C2 & C3 requires addressing for the development. Based on the above the following responses are offered:

C2.5 Use Standards

C2.5.1 Car Parking Numbers

Objective:

That an appropriate level of car parking spaces are provided to meet the needs of the use.

Acceptable Solutions	Performance Criteria
A1 The number of on-site car parking spaces must be no less than the number specified in Table 2.1, less the number of car parking spaces that cannot be provided due to the site including container refund scheme space, excluding if: (a) the site is subject to a parking plan for the area adopted by council, in which case parking provision (spaces or cash-in-lieu) must be in accordance with that plan; (b) the site is contained within a parking precinct plan and subject to Clause C2.7; (c) the site is subject to Clause C2.5.5; or (d) it relates to an intensification of an existing use or development or a change of use where: (i) the number of on-site car parking spaces for the existing use or development specified in Table C2.1 is greater than the number of car parking spaces specified in Table C2.1 for the proposed use or development, in which case no additional on-site car parking is required; or (ii) the number of on-site car parking spaces for the existing use or development specified in Table C2.1 is less than the number of car parking spaces specified in Table C2.1 for the proposed use or development, in which case on-site car parking must be calculated as follows: N = A + (C- B) N = Number of on-site car parking spaces required A = Number of existing on-site car parking spaces B = Number of on-site car parking spaces required for the existing use or development specified in Table C2.1	**P1** The number of on-site car parking spaces for uses, excluding dwellings, must meet the reasonable needs of the use, having regard to: (a) the availability of off-street public car parking spaces within reasonable walking distance of the site; (b) the ability of multiple users to share spaces because of: (i) variations in car parking demand over time; or (ii) efficiencies gained by consolidation of car parking spaces; (c) the availability and frequency of public transport within reasonable walking distance of the site; (d) the availability and frequency of other transport alternatives; (e) any site constraints such as existing buildings, slope, drainage, vegetation and landscaping; (f) the availability, accessibility and safety of on-street parking, having regard to the nature of the roads, traffic management and other uses in the vicinity; (g) the effect on streetscape; and (h) any assessment by a suitably qualified person of the actual carparking demand determined having regard to the scale and nature of the use and development. **P1.2** The number of car parking spaces for dwelling must meet the reasonable needs of the use, having regard to: (a) the nature and intensity of the use and car parking required;

Received
28.05.2025
Exhibited

C= Number of on-site car parking spaces required for the proposed use or development specified in Table C2.1.	(b) the size of the dwelling and the number of bedrooms; and (c) the pattern of parking in the surrounding area.
Response: The development requires one space per employee. As 3 employees will work at the site, plan LO-02 shows 13 spaces with an extra accessible bay, therefore meets acceptable solution.	

C2.6 Development Standards for Buildings and Works

C2.6.1 Construction of parking areas

Objective:

That parking areas are constructed to an appropriate standard.

Acceptable Solutions	Performance Criteria
A1 All parking, access ways, manoeuvring and circulation spaces must: (a) be constructed with a durable all weather pavement; (b) be drained to the public stormwater system, or contain stormwater on the site; and (c) excluding all uses in the Rural Zone, Agriculture Zone, Landscape Conservation Zone, Environmental Management Zone, Recreation Zone and Open Space Zone, be surfaced by a spray seal, asphalt, concrete, pavers or equivalent material to restrict abrasion from traffic and minimise entry of water to the pavement.	**P1** All parking, access ways, manoeuvring and circulation spaces must be readily identifiable and constructed so that they are useable in all weather conditions, having regard to: (a) the nature of the use; (b) the topography of the land; (c) the drainage system available; (d) the likelihood of transporting sediment or debris from the site onto a road or public place; (e) the likelihood of generating dust; and (f) the nature of the proposed surfacing.
Response: Meets acceptable standard A1.	

C2.6.2 Design and layout of parking areas

Objective:

That parking areas are designed and laid out to provide convenient, safe and efficient parking.

Acceptable Solutions	Performance Criteria
A1.1 Parking, access ways, manoeuvring and circulation spaces must either: (a) Comply with the following: (i) have a gradient in accordance with *Australian Standard AS 2890 – Parking facilities, Parts 1-6*; (ii) provide for vehicles to enter and exit the site in a forward direction where providing for more than 4 parking spaces;	**P1** All parking, access ways, manoeuvring and circulation spaces must be designed and readily identifiable to provide convenient, safe and efficient parking, having regard to: (a) the characteristics of the site; (b) the proposed slope, dimensions and layout; (c) useability in all weather conditions; (d) vehicle and pedestrian traffic safety;

Received
28.05.2025
Exhibited

(iii) Have an access width not less than the requirements in Table C2.2; (iv) Have car parking space dimensions which satisfy the requirements in Table C2.3; (v) Have a combined access and manoeuvring width adjacent to parking spaces not less than the requirements in Table C2.3 where there are 3 or more car parking spaces; (vi) Have a vertical clearance of not less than 2.1m above the parking surface level; and (vii) Excluding a single dwelling, be delineated by line marking or other clear physical means; or (b) Comply with *Australian Standard AS 2890 – Parking facilities, Parts 1-6.* **A1.2** Parking spaces provided for use by persons with a disability must satisfy the following: (a) Be located as close as practicable to the main entry point to the building; (b) Be incorporated into the overall car park design; and (c) Be designed and constructed in accordance with *Australian/New Zealand Standard AS/NZS 2890.6:2009 Parking facilities, Off-street parking for people with disabilities*.	(e) the nature and use of the development; (f) the expected number and type of vehicles; (g) the likely use of the parking areas by persons with a disability; (h) the nature of traffic in the surrounding area; (i) the proposed means of parking delineation; and (j) the provision of *Australian Standard AS 2890.1:2004 Parking facilities, Part 1: Off-street car parking* and *AS 2890.2: 2002 Parking facilities, part 2: Off-street commercial vehicle facilities.*
Response: Car parks will be all weather and meet requirements of AS 2890, therefore meets acceptable solution A1.1 and A1.2.	

C2.6.3 Number of accesses for vehicles

Objective:

That

(a) access to land is provided which is safe and efficient for users of the land and all road network users, including but not limited to drivers, passengers, pedestrians and cyclists by minimising the number of vehicle accesses;

(b) accesses do not cause an unreasonable loss of amenity of adjoining uses; and

(c) the number of accesses minimise impacts on the streetscape.

Acceptable Solutions	Performance Criteria
A1 The number of accesses provided for each frontage must: (a) Be no more than 1; or (b) No more than the existing number of accesses, whichever is the greater.	**P1** The number of accesses for each frontage must be minimised, having regard to: (a) Any loss of on-street parking: and (b) Pedestrian safety and amenity; (c) Traffic safety;

Received
28.05.2025
Exhibited

A2 Within the Central Business Zone or in a pedestrian priority street no new access is provided unless an existing access is removed.	(d) Residential amenity on adjoining land; and (e) The impact on the streetscape. **P2** Within the Central Business Zone or in a pedestrian priority street, any new accesses must: (a) Not have an adverse impact on: (i) Pedestrian safety and amenity; or (ii) Traffic safety; and (b) Be compatible with the streetscape.
Response: The development has one entry / exit site for general traffic and one for ambulances which presents safe intersection sight distance therefore meets acceptable solution for A1.	

C2.6.5 Pedestrian access

Objective:

That the pedestrian access with parking areas is provided in a safe and convenient manner.

Acceptable Solutions	Performance Criteria
A1.1 Uses that require 10 or more car parking spaces must: (a) Have a 1m wide footpath that is separated from the access ways or parking aisles, excluding where crossing access ways or parking aisles, by: (i) a horizontal distance of 2.5m between the edge of the footpath and the access way or parking aisle; or (ii) protective devices such as bollards, guard rails or planters between the footpath and the access way or parking aisle; and (b) be signed and line marked at points where pedestrians cross access ways or parking aisles. **A1.2** In parking areas containing accessible car parking spaces for use by persons with a disability, a footpath having a width not less than 1.5m and a gradient not steeper than 1 in 14 is required from those spaces to the main entry point to the building.	**P1** Safe and convenient pedestrian access must be provided within parking areas, having regard to: (a) the characteristics of the site; (b) the nature of the use; (c) the number of parking spaces; (d) the frequency of vehicle movements; (e) the needs of persons with a disability; (f) the location and number of footpath crossings; (g) vehicle and pedestrian traffic safety; (h) the location of any access ways or parking aisles; and (i) any protective devices proposed for pedestrian safety.
Response: A1.1 not applicable. A1.2 footpath shown on LO-02.	

Received
28.05.2025
Exhibited

C3.5 Use Standards

C3.5.1 Traffic generation at a vehicle crossing, level crossing or new junction

Objective:

To minimise any adverse effects on the safety and efficiency of the road or rail network from vehicular traffic generated from the site at an existing or new vehicle crossing or level crossing or new junction.

Acceptable Solutions	Performance Criteria
A1.1 For a category 1 road or a limited access road, vehicular traffic to and from the site will not require: (a) a new junction; (b) a new vehicle crossing; or (c) a new level crossing. **A1.2** For a road, excluding a category 1 road or a limited access road, written consent for a new junction, vehicle crossing, or level crossing to serve the use and development has been issued by the road authority. **A1.3** For the rail network, written consent for a new private level crossing to serve the use and development has been issued by the rail authority. **A1.4** Vehicular traffic to and from the site, using an existing vehicle crossing or private level crossing, will not increase by more than: (a) the amounts in Table C3.1; or (b) allowed by a licence issued under Part IVA of the Roads and Jetties Act 1935 in respect to a linted access road. **A1.5** Vehicular traffic must be able to enter and leave a major road in a forward direction.	**P1** Vehicular traffic to and from the site must minimise any adverse effects on the safety of a junction, vehicle crossing or level crossing or safety or efficiency of the road or rail network, having regard to: (a) any increase in traffic caused by the use; (b) the nature of the traffic generated by the use; (c) the nature of the road; (d) the speed limit and traffic flow of the road; (e) an alternative access to a road; (f) the need for the use; (g) any traffic impact assessment; and (h) any advice received from the rail or road authority.
Response: Complies with Acceptable Solution.	

Received
28.05.2025
Exhibited

7. Summary

This Traffic Impact Assessment (TIA) has been prepared by Risden Knightley of RJK Consulting Engineers on behalf of Archadia Architecture and The Crown-Department of Health for 20 Union Street, Longford within Northern Midlands Council, Tasmania. The intention of the Traffic Impact Assessment is to support a Development Application and provide improved facilities for users of the development.

The report is summarised as follows:

- The assessment has reviewed the adjacent accesses directly affected, the immediate road network serving the area, road conditions and crash history. No significant traffic safety issues were apparent;
- The relative increase in traffic associated with the proposal will be minimal and is acceptable noting adequate SISD is achieved and does not compromise safety;
- The proposed development network is generally in accordance with Tasmanian Planning Scheme - Northern Midlands – State Planning Provisions;
- The increased traffic experienced by Union Street, George Street and the wider road network is assessed as within the acceptable range in terms of impact on local amenity. The local road network is assessed as being able to cope with the increased traffic activity.

It is therefore concluded that the proposed development is supportable on traffic planning grounds and the proposed development will operate satisfactorily. This report demonstrates that the proposed development can be satisfactorily accommodated within the existing road network and the future road hierarchy adopted for the area.

Received
28.05.2025
Exhibited

8. Regulatory Feedback

8.1 Council Feedback

No traffic count data was available from the Council for either Union or George Streets.

8.2 DSG Feedback

DSG provided crash statistics within the last 5 years, with no reported crashes in the immediate vicinity of the development.

Received
28.05.2025
Exhibited

9. Conclusion

This TIA has investigated the potential impacts for the creation of the ambulance development.

Key conclusions are:

- The proposed new access point is to be located as per the attached plan. The access is to be constructed to council Urban Standards as per the Tasmanian Standard drawing series;
- Traffic services is deemed adequate for by the road and access arrangement as proposed will be satisfactory in servicing the development;
- Sight distances for the new access are deemed to comply with the Austroads and Council requirements, and sound SISD is available generally based on the site assessment; and
- No other Planning Scheme requirements are outstanding.

I, Risden Knightley as a qualified chartered engineer and Fellow of Engineers Australia conclude based on the assessment of information available, that the traffic aspects associated with the development are adequate and meet the requirements for traffic, safety and service. I also note that there appears to be no other potential adverse effects on existing traffic situations, subject to the recommendations and conclusions noted.



Risden Knightley

BE (Civil), Ass Dip Civil Eng, FIEAust, CC 2539X

Received
28.05.2025
Exhibited

Appendix A

Exhibited

Received
28.05.2025

AMBULANCE TASMANIA
PROPOSED AMBULANCE STATION
20 UNION STREET, LONGFORD
MAR 2025



LOCALITY PLAN
N.T.S.

DRAWING INDEX		
SHEET No.	DESCRIPTION	REVISION
G01	CIVIL SERVICES - COVER SHEET AND LOCALITY PLAN	B
G02	CIVIL SERVICES - NOTES	B
C01	CIVIL SERVICES - GENERAL DETAILS SHEET 1	B
C02	CIVIL SERVICES - GENERAL DETAILS SHEET 2	B
C03	CIVIL SERVICES - SITE LOCATION & SERVICES PLAN	B
C04	CIVIL SERVICES - GENERAL ARRANGEMENT & FSL PLAN	B
C05	CIVIL SERVICES - SERVICES PLAN	B
C06	CIVIL SERVICES - PAVEMENT PLAN	B
C07	CIVIL SERVICES - DRIVEWAY PROFILE SECTIONS	B
C08	HYDRAULIC SERVICES - STATION WATER RETICULATION	B
C09	CIVIL SERVICES - STORMWATER PROFILES\ SHEET 1	B
C10	CIVIL SERVICES - STORMWATER PROFILES SHEET 2	B
C11	CIVIL SERVICES - SEWER PROFILES SHEET 1	B

Risden Knightley - 991537
Registered Professional Engineer
BE Civil FIEAust CPEng NPR
27/05/2025
Tasmanian Accreditation No. CC2539X

DRAWING LEGEND

EXISTING	PROPOSED
DRAINAGE MAIN	DRAINAGE MAIN
DRAINAGE CONNECTION	DRAINAGE CONNECTION
SEWER MAIN	SEWER MAIN
SEWER CONNECTION	SEWER CONNECTION
WATER MAIN	WATER MAIN
WATER CONNECTION	WATER CONNECTION
DRAINAGE MANHOLE	DRAINAGE MANHOLE (MH1)
SEWER MANHOLE (S)	SEWER MANHOLE
STOP VALVE (SV)	STOP VALVE
FIRE PLUG (FH)	FIRE PLUG
WATER METER (WM)	WATER METER

Rev.	Amendment	Date
B	ISSUED IN RESPONSE TO RFI. ISSUED FOR TENDER	22.05.2025
A	ISSUED FOR TENDER	05/05/2025

rjk Consulting Engineers

Designed: RJK
Drawn: ASW
Endorsed: RJK
Accreditation: CC2539X

Client: AMBULANCE TASMANIA
Project: 20 UNION STREET, LONGFORD PROPOSED STATION

Drawing title: CIVIL SERVICES COVER SHEET AND LOCALITY PLAN
Scale: NTS
Original size: A3

Date: 21.03.2025
Status: TENDER ISSUE
Drawing No: 24/25TAS082
Sheet: G01
Revision: B

Received
28.05.2025

Exhibited

GENERAL:

WORK HEALTH & SAFETY NOTICE:
RJK HAVE CONSIDERED THE HAZARDS AND RISKS ASSOCIATED WITH THE CONSTRUCTION, OPERATION, MAINTENANCE AND EVENTUAL DEMOLITION OF THIS PROJECT. THERE ARE A NUMBER OF HAZARDS AND HENCE RISKS WHICH ARE NOT UNIQUE TO THIS PROJECT WHICH NEED TO BE MANAGED DURING THESE PHASES. RJK REMIND CONSTRUCTORS, OPERATORS, MAINTAINERS AND DEMOLISHERS OF THEIR RESPONSIBILITIES UNDER WORK HEALTH & SAFETY ACTS AND REGULATIONS. THE FOLLOWING RISKS HAVE BEEN IDENTIFIED WHICH ARE UNUSUAL TO THIS PROJECT: NIL

UNLESS SPECIFIED OTHERWISE BY DOCUMENTATION SPECIFIC TO THIS PROJECT ALL DIMENSIONS, MATERIALS, WORKMANSHIP ETC SHALL COMPLY WITH DSG STANDARD CONTRACT DOCUMENTS AND SPECIFICATIONS (R SERIES) AND IPWEA SUBDIVISION STANDARD DRAWINGS ISSUED DECEMBER 2020.

ONLY THOSE SERVICES CONSPICUOUS DURING FIELD SURVEYS HAVE BEEN PLOTTED. THE LOCATION OF THESE SERVICES IS APPROXIMATE ONLY AND NO GUARANTEE IS GIVEN THAT ALL SERVICES ARE SHOWN. THE CONTRACTOR SHALL CONFIRM ON SITE PRIOR TO THE START OF WORKS THE LOCATION OF ALL SERVICES WITH THE RELEVANT AUTHORITY.

CONTRACTOR SHALL POTHOLE ALL EXISTING SERVICES, WHERE REQUIRED, PRIOR TO THE COMMENCEMENT OF WORKS WHICH MAY BE AFFECTED BY THE LINE AND LEVEL OF THE EXISTING SERVICE. WHERE A CONFLICT WITH AN EXISTING SERVICE IS IDENTIFIED THE CONTRACTOR SHALL SEEK DIRECTION FROM THE SUPERINTENDENT. NO CLAIM FOR VARIATION OR EXTENSION OF TIME WILL BE CONSIDERED AS A RESULT OF THE CONTRACTORS FAILURE TO UNDERTAKE THIS INVESTIGATION, AT A SUFFICIENT TIME PRIOR TO THE INSTALLATION WORKS, TO ALLOW ANY REDESIGN TO OCCUR.

PRIOR TO THE COMMENCEMENT OF SITE WORKS THE CONTRACTOR SHALL PREPARE. SUBMIT AND GAIN APPROVAL FROM THE RELEVANT COUNCIL FOR A SOIL AND WATER MANAGEMENT PLAN FOR THE CONSTRUCTION WORKS. THE CONTRACTOR SHALL BE RESPONSIBLE FOR THE INSTALLATION AND MAINTENANCE OF ALL REQUIRED PROTECTION MEASURES FOR THE DURATION OF THE CONTRACT AND UNTIL NEW VEGETATION IS FULLY ESTABLISHED.

PRIOR TO THE COMMENCEMENT OF ANY COUNCIL INFRASTRUCTURE WORKS. THE CONTRACTOR SHALL APPLY TO COUNCIL, AND RECEIVE A PERMIT TO CONSTRUCT PUBLIC INFRASTRUCTURE.

FOR WORKS WITHIN THE ROAD RESERVATION THE CONTRACTOR SHALL APPLY FOR AND RECEIVE A ROAD OPENING PERMIT FROM COUNCIL PRIOR TO THE COMMENCEMENT OF WORKS, THIS APPLICATION SHALL INCLUDE THE PREPARATION OF TRAFFIC AND PEDESTRIAN MANAGEMENT PLANS AS APPLICABLE.

THE CONTRACTOR SHALL BE RESPONSIBLE FOR THE INSTALLATION AND MAINTENANCE OF ALL PEDESTRIAN AND TRAFFIC MANAGEMENT DEVICES TO COMPLY WITH AS1742 FOR THE DURATION OF THE WORKS.

WHERE REQUIRED BY COUNCIL THE CONTRACTOR SHALL PREPARE IN ELECTRONIC (.DWG) FORMAT "AS CONSTRUCTED" DRAWINGS TO THE SATISFACTION OF COUNCIL MUNICIPAL ENGINEER SHOWING THE AS INSTALLED LOCATION OF ALL ABOVE AND BELOW GROUND WORKS. CONFIRMATION OF APPROVAL, FROM THE RELEVANT AUTHORITY, OF THE THE COMPLETED DRAWINGS SHALL BE SUBMITTED TO THE SUPERINTENDENT PRIOR TO THE ISSUING OF THE CERTIFICATE OF PRACTICAL COMPLETION.

ALL PIPEWORK (WATER, SEWER AND STORMWATER) PROFILE LEVELS ARE TO THE PIPE INVERT LEVEL. ALLOW ADDITIONAL TRENCHING DEPTH FOR BEDDING AS INDICATED ON THE TYPICAL DETAILS.

THE CONTRACTOR IS RESPONSIBLE FOR COMPLYING WITH ALL CONDITIONS OF THE PLANNING PERMIT, A COPY OF WHICH MUST BE KEPT ON SITE.

PROPRIETARY PRODUCTS ARE TO BE INSTALLED IN ACCORDANCE WITH THE MANUFACTURER'S WRITTEN INSTRUCTIONS.

Risden Knightley - 991537
Registered Professional Engineer
BE Civil FIEAust CPEng NPR
27/05/2025
Tasmanian Accreditation No. CC2539X

EARTHWORKS:

DEMOLISH AND REMOVE ALL CONCRETE SLABS, KERBS, WALLS, FOOTINGS ETC. AS NOTED AND REQUIRED FOR THE CONSTRUCTION OF THE NOMINATED WORKS.

CONTRACTOR TO STRIP MINIMUM 300mm SOIL ACROSS THE SITE. BUILD UP PAVEMENT SUBGRADE WITH SUB-BASE 2.

FOLLOWING DEMOLITION AND REMOVAL OF SLABS, KERBS ETC. AND STRIPPING OF THE SITE TO THE REQUIRED FORMATION LEVELS, GRADE SUB-GRADE TO A SMOOTH PROFILE AND CONSOLIDATE TO 98% MAXIMUM DRY DENSITY(AS 1289.5) PROOF ROLL IN THE PRESENCE OF THE SUPERINTENDENT USING A SINGLE AXLE RIGID TRUCK WITH A FULL LEGAL LIMIT LOAD, REMOVE ANY UNSUITABLE SOFT, WET OR HEAVING MATERIAL AS DIRECTED BY THE SUPERINTENDENT AND REPLACE WITH COMPACTED SELECT FILL IN LAYERS NOT EXCEEDING 200mm LOOSE TO ACHIEVE 98% STANDARD COMPACTION (AS1289.5).

STRIPPED TOPSOIL SHALL BE STOCKPILED ON-SITE FOR RESPREADING ON BATTERS AND DISTURBED AREAS, ALL EXCESS TOPSOIL TO BE RETAINED ON-SITE UNLESS APPROVED OTHERWISE BY THE SUPERINTENDENT.

ALL EXCESS EXCAVATED MATERIAL SHALL BECOME THE PROPERTY OF THE CONTRACTOR AND SHALL BE DISPOSED OF OFF SITE UNLESS APPROVED OTHERWISE BY THE SUPERINTENDENT.

ANY IMPORTED FILL MATERIAL FOR UNDER ROADWAYS AND CARPARKS SHALL BE WELL GRADED AND HAVE A MINIMUM CBR VALUE OF 15% AND SHALL BE COMPACTED TO A MINIMUM OF 95% STANDARD COMPACTION TO AS1289 IN LAYERS NOT EXCEEDING 200mm LOOSE THICKNESS.

ALL EARTHWORKS INCLUDING EMBANKMENTS SHALL BE PREPARED AND CONSTRUCTED TO DSG SPECIFICATION R22 & R23

WHERE EMBANKMENT FILLS EXCEED 400mm IN HEIGHT ABOVE STRIPPED SURFACE LEVEL THE CONTRACTOR SHALL PROVIDE COMPACTION TEST RESULTS FOR THE PLACED MATERIAL AT A RATE OF AT LEAST 1 PER 500M2 OR A MINIMUM OF 2 PER LAYER WHICHEVER IS THE GREATER UNLESS APPROVED OTHERWISE BY THE SUPERINTENDENT.

DURING FORMATION WORKS THE CONTRACTOR SHALL ENSURE THAT ADEQUATE STEPS ARE TAKEN TO PROTECT THE SUBGRADE FROM WET WEATHER PRIOR TO THE PLACEMENT OF THE SUB-BASE. NO CLAIM WILL BE CONSIDERED AS A RESULT OF THE CONTRACTORS FAILURE TO PROTECT THE WORKS.

ROADWORKS:

WHERE NEW WORKS ABUT EXISTING SAWCUT ALL INTERFACES TO NEAT STRAIGHT LINES AND RECTANGULAR SHAPES AND MAKE GOOD TO MATCH.

BACKFILL ALL TRENCHES AND EXCAVATIONS WITHIN VEHICLE PAVEMENTS FULL DEPTH WITH 20mm FINE CRUSHED ROCK CONSOLIDATED IN MAXIMUM 150 LAYERS TO 96% MODIFIED COMPACTION.

SUBMIT TO THE CONSULTING ENGINEER PRIOR TO THEIR USE MATERIAL PROPERTIES AND SOURCE FOR ALL ROAD MAKING MATERIALS. UNLESS NOTED OTHERWISE PAVEMENT MATERIALS SHALL COMPLY WITH THE REQUIREMENTS OF DSG SPECIFICATION R40 FOR BASE CLASS A AND SUB-BASE 1 MATERIALS.

EACH COMPLETED PAVEMENT LAYER SHALL BE COMPACTED TO A MINIMUM DDR OF 96% FOR SUB-BASE AND 98% FOR BASE COURSE AND PROOF ROLLED IN THE PRESENCE OF THE SUPERINTENDENT USING A SINGLE AXLE RIGID TRUCK WITH A FULL LEGAL LIMIT LOAD.

CONSTRUCT PAVEMENT BETWEEN NOMINATED LEVELS TO SMOOTH GRADES AND TRANSITION TO DRAIN TO PITS, KERB AND GUTTER, V-DRAINS ETC.

HOTMIX AND PAVED SURFACES SHALL HAVE A BITUMEN EMULSION PRIME COAT APPLIED TO THE CLEAN SWEPT SURFACE OF THE BASE COURSE.

CARPARK SPACES ARE TO BE DELINEATED BY PAINTED LINES. 80mm WIDE WITH TWO COATS OF ROAD MARKING PAINT TO DSG SPECIFICATION R64. CLEARLY MARK 'DISABLED' SPACES BY PAINTED SYMBOL TO AUSTRALIAN STANDARD.

CONCRETE COMPRESSIVE STRENGTH SHALL BE:
PAVEMENTS AND GRATED TRENCH - N25
PITS, & MINOR WORKS - N25.
WORKMANSHIP, MATERIALS AND DESIGN SHALL BE IN ACCORDANCE WITH AS3600 AND THE ASSOCIATED CODES LISTED THEREIN AND THE SPECIFICATION.

GRADE AND ROLL MINIMUM 100 TOPSOIL TO ALL GRASSED AREAS AND PLANTERS. WHERE NECESSARY TO RAISE LEVELS. PLACE AND CONSOLIDATE GENERAL FILL FROM SITE BENEATH TOPSOIL.

PRECAST CONCRETE WHEELSTOPS TO BE HUMES OR EQUIVALENT 2000 LONG WITH 2No. 16dia GALV. SPIKES 300 LONG.

CONCRETE PAVEMENTS GENERAL:

FOOTPATHS, KERB RAMPS AND DRIVEWAYS TO BE CONSTRUCTED IN ACCORDANCE WITH IPWEA MUNICIPAL STANDARD DRAWINGS TSD-R11-v3, TSD-R18-v3 AND TSD-R09-v3 (UNO).

CONSTRUCT PAVEMENT BETWEEN NOMINATED LEVELS TO SMOOTH GRADES AND TRANSITION TO PITS, KERBS, V-DRAINS, EDGES etc. THE MINIMUM GRADIENT OF ANY AREA ON THE PAVEMENT IS TO BE 1:100. WHERE DISCREPANCIES EXIST ON THE DRAWINGS REFER TO SUPERINTENDENT FOR DIRECTION.

THE FINISHED SURFACE LEVEL OF ANY PAVEMENT ADJACENT TO BUILDINGS SHALL BE BELOW THE WALL DAMP PROOF COURSE AND SHALL NOT OBSCURE WEEP HOLES OR DRAINAGE OPENINGS. THE PAVEMENT SHALL GRADE AWAY FROM THE BUILDING.

INSTALL 2No. N16 x 2100 LONG TRIMMER BARS AT 45Deg ACROSS ALL RE-ENTRANT CORNERS.
INSTALL CONTROL AND EXPANSION JOINTS AS SHOWN ON THE DRAWINGS.
INSTALL ISOLATION JOINTS AT ALL INTERFACES WITH EXISTING OR PROPOSED STRUCTURES.

ALL JOINT SEALANTS SHALL BE INSTALLED IN ACCORDANCE WITH THE MANUFACTURER'S WRITTEN SPECIFICATIONS.

TOLERANCES OF FINISHED SURFACES
MAXIMUM DEVIATION UNDER A 3m STRAIGHT EDGE = +/-10mm
MAXIMUM LEVEL DIFFERENCE FROM DESIGN LEVELS = +/-20mm
CONCRETE THICKNESS AND REINFORCEMENT LOCATION TO AS3600

CURE SURFACE FOR MINIMUM 7 DAYS AFTER PLACEMENT, CONTRACTOR TO SUBMIT TO THE SUPERINTENDENT FOR APPROVAL THE PROPOSED METHOD OF CURING PRIOR TO THE COMMENCEMENT OF PAVEMENT WORKS. PROTECT SURFACE FROM VEHICULAR TRAFFIC DURING CURING PERIOD.

STORMWATER RETICULATION - MUNICIPAL

ALL WORKS ARE TO BE IN ACCORDANCE WITH IPWEA STANDARD DRAWINGS NOVEMBER 2013,

PROVIDE MINIMUM 2m LONG GEOFABRIC WRAPPED SUBSOIL DRAIN STARTER ON THE UPSTREAM SIDE OF ALL STORMWATER MANHOLES AND PITS. SUBSOIL DRAIN TO BE CONSTRUCTED SUCH THAT IT WILL DRAIN THE BASE OF THE BEDDING GRAVEL. INSTALL MASS CONCRETE BULKHEADS TO PERIMETER OF MANHOLE TO PREVENT BYPASS OF WATER AROUND MANHOLE.

FOR PIPE BEDDING AND BACKFILL REFER WSAA STD DRG. SEW-1201. PIPE EMBEDMENT TO BE 7mm CLEAN AGGREGATE (UNO). BACKFILL ALL TRENCHES WITHIN VEHICLE PAVEMENTS TO THE UNDERSIDE OF THE PAVEMENT LAYER FULL DEPTH WITH 20mm FINE CRUSHED ROCK CONSOLIDATED IN MAXIMUM 150MM LAYERS TO 96% MODIFIED COMPACTION.

ENSURE COVERS TO ALL PITS AND MANHOLES ARE INSTALLED FLUSH WITH FINISHED SURFACE LEVEL. MANHOLES OUTSIDE OF SEALED AREAS ON GRADES EXCEEDING 14% SHALL BE INSTALLED HORIZONTALLY WITH A 1m SAFE LEVEL WORKING AREA SURROUNDING. PIT COVERS SHALL BE OF A TYPE APPROVED BY COUNCIL AND EITHER CLASS D WHERE LOCATED WITHIN ROADWAY PAVEMENTS OR CLASS B IN OTHER LOCATIONS.

ALL STORMWATER PIPES TO BE:
<300mm DIAMETER UPVC MINIMUM CLASS SN8 SCJ
>=300mm DIAMETER STORMPRO or BLACKMAX (PP) MINIMUM CLASS SN8 RRJ

PROPERTY CONNECTION TO BE DN150 SN8 UPVC SW TO IPWEA STD. DRG. TSD-SW27-v3 (UNO)

WHERE MANAGED BY THE THE CONTRACTOR, THE CONTRACTOR SHALL ENSURE THE AS-CONSTRUCTED DRAWINGS, SURVEY & CONTROL AND DATA COLLECTION IS UNDERTAKEN AND PROVIDED TO COUNCIL IN ACCORDANCE COUNCIL REQUIREMENTS.

PRIVATE SERVICES - PLUMBING

ALL PLUMBING WILL BE IN ACCORDANCE WITH THE TASMANIAN PLUMBING REGULATIONS, AS3500, NATIONAL CONSTRUCTION CODE (AND ALL REFERENCED STANDARDS AND GUIDEBOOKS) AND TO THE LOCAL AUTHORITY APPROVAL

PIPEWORK LAYOUTS ARE DIAGRAMMATIC ONLY. CO-ORDINATE ALL SERVICES PRIOR TO INSTALLATION

DN100 SEWER TO BE UPVC SCJ CLASS SN8
DN150 AND DN225 STORMWATER TO BE UPVC SCJ CLASS SN8
FOLLOWING COMPLETION OF THE WORKS, FLUSH ALL PIPING SYSTEMS AND LEAVE FREE OF FOREIGN MATTER.

PLUMBING WORKS AS DEFINED BY THE DIRECTOR OF BUILDING CONTROL ARE TO BE UNDERTAKEN BY A LICENSED AND ACCREDITED PLUMBING PRACTITIONER. THE ACCREDITED PLUMBING PRACTITIONER IS TO LIAISE WITH THE LOCAL AUTHORITY AND ARRANGE A START WORK NOTICE, ALL MANDATORY INSPECTIONS, TESTING AND, PRACTICAL & FINAL COMPLETION CERTIFICATES

SURVEY CONTROL

DATE OF JANUARY 2025

WHILE REASONABLE EFFORT HAS BEEN MADE TO LOCATE ALL VISIBLE ABOVE GROUND SERVICES, THERE MAY BE OTHER SERVICES THAT WERE NOT LOCATED DURING THIS SURVEY

PAVING

ALL WORKS TO BE IN ACCORDANCE WITH CMAA CONCRETE FLAG PAVEMENTS - DESIGN AND CONSTRUCTION GUIDE AND CMAA TECHNICAL NOTE T46 - CONCRETE SEGMENTAL PAVEMENTS DETAILING GUIDE (www.cmaa.com.au).
BEDDING SAND SHALL COMPLY WITH THE FOLLOWING GRADING:

SIEVE SIZE	%PASSING
4.75mm	90 - 100
2.36mm	80 - 100
1.18mm	50 - 85
600 microns	25 - 60
300 microns	10 - 30
150 microns	5 - 15
75 microns	0 - 10

JOINTING SAND SHALL BE DRY AND COMPLY WITH THE FOLLOWING GRADING:

SIEVE SIZE	%PASSING
2.36mm	100
1.18mm	90 - 100
600 microns	60 - 90
300 microns	30 - 60
150 microns	15 - 30
75 microns	5 - 10

JOINT SAND SHALL BE REPEATEDLY SWEPT INTO PAVER JOINTS UNTIL JOINTS ARE THOROUGHLY FILLED.

BESSER UNIPAVE TO BE LAID IN ACCORDANCE WITH THE CEMENT AND CONCRETE ASSOCIATION OF AUSTRALIA'S TECHNICAL NOTE 56 - GUIDE SPECIFICATION FOR INTERLOCKING ROAD PAVEMENTS 60mm THICK TYPE A - HERRINGBONE PATTERN ON SAND BEDDING ON CONSOLIDATED BASE AS DETAILED.

BRICK PAVING SAND TO COMPLY WITH MATERIALS SPECIFICATION IN THE CLAY AND BRICK PAVER INSTITUTE "PAVER NOTE ONE, SPECIFYING AND LAYING CLAY PAVERS."

SAND NOMINATED AS SAND CEMENT SHALL CONTAIN 10% CEMENT AND SHALL BE PLACED TOTALLY DRY TO DRY PAVERS ETC.

BRICK PAVERS SHALL BE 65 THICK CLAY BRICK WITH A MINIMUM CHARACTERISTIC COMPRESSIVE STRENGTH OF N45.

MAKE UP FROM EXCAVATED SURFACE TO PAVEMENT SUBGRADE IN APPROVED BACKFILL MATERIAL CONSOLIDATED IN MAXIMUM 150 LAYERS TO 96% MAXIMUM DRY DENSITY.

HOLD POINTS

THE FOLLOWING HOLD POINTS SHALL BE WITNESSED BY THE SUPERINTENDENT FOR APPROVAL PRIOR TO THE CONTINUATION OF CONSTRUCTION:
- STRIPPED SURFACE PRIOR TO PLACEMENT OF FILL
- EMBANKMENT SUBGRADE PRIOR TO PLACEMENT OF SUB BASE
- TOP OF BASE A PRIOR TO SEALING / CONCRETING
- SERVICES CONNECTIONS TO COUNCIL AND TASWATER INFRASTRUCTURE

PERIMETER SURFACE LEVELS

LEVELS SHALL COMPLY WITH THE REQUIREMENTS OF THE NCC AND PERMIT AUTHORITIES REQUIREMENTS.

THE MINIMUM HEIGHT OF A BUILDING SLAB ABOVE FINISHED GROUND LEVEL SHALL BE 150mm. EXCEPT IN SANDY. WELL DRAINED AREAS WHERE THE MINIMUM HEIGHT SHALL BE 100MM. THESE HEIGHTS CAN BE REDUCED LOCALLY TO 50MM WHERE THERE IS AN ADJOINING PAVED AREA THAT SLOPES AWAY FROM THE BUILDING AT A MINIMUM 2.5% FOR A MINIMUM 1.0M. THESE RESTRICTIONS DO NOT APPLY TO BELOW GROUND SLABS WHICH ARE PROTECTED BY FULLY WATER-PROTECTED AND DRAINED RETAINED WALLS

Rev.	Amendment	Date
B	ISSUED IN RESPONSE TO RFI. ISSUED FOR TENDER	22.05.2025
A	ISSUED FOR TENDER	05/05/2025

rjk Consulting Engineers

Designed: RJK
Drawn: ASW
Endorsed: RJK
Accreditation: CC2539X

Client: AMBULANCE TASMANIA
Project: 20 UNION STREET, LONGFORD
PROPOSED STATION

Drawing title: CIVIL SERVICES NOTES
Scale: NTS
Original size: A3

Date: 21.03.2025
Status: TENDER ISSUE
Drawing No: 24/25TAS082
Sheet: G02
Revision: B

Received
28.05.2025

Exhibited

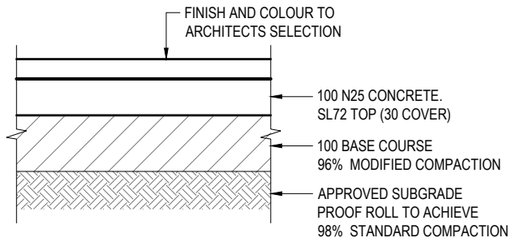

NOTE: PROVIDE CONTROL JOINTS (CJ) AT MAX. 4m CENTRES

LIGHT DUTY CONCRETE DETAIL
SCALE 1:10

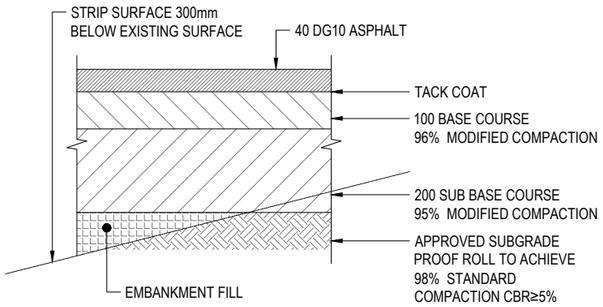

HEAVY DUTY ASPHALT DETAIL
SCALE 1:10

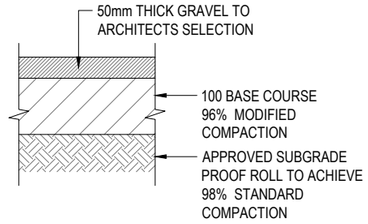

SYNTHETIC GRASS DETAILS
SCALE 1:10

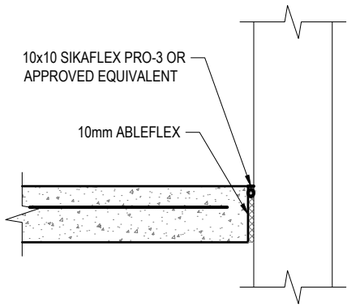

ISOLATION JOINT (IJ)
SCALE 1:10
NOTE: INSTALL IJ ADJACENT ALL CONCRETE/BUILDING INTERFACES

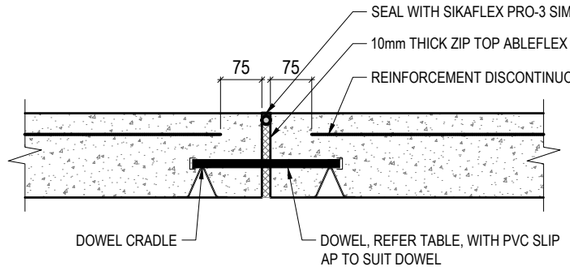

EXPANSION JOINT (EJ)
SCALE 1:10
INSTALL AT 18mm MAX CENTRES

DOWEL TABLE

SLAB THICKNESS (mm)	DOWEL DIAMETER (mm)	DOWEL LENGTH (mm)	DOWEL SPACING
100	12	450	300
150	20	450	300

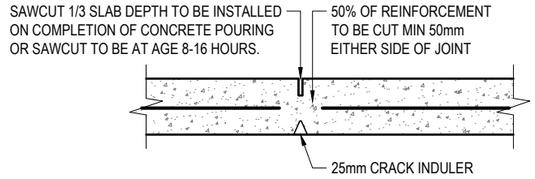

CONTROL JOINT (CJ)
SCALE 1:10
INSTALL @6m MAX CENTRES

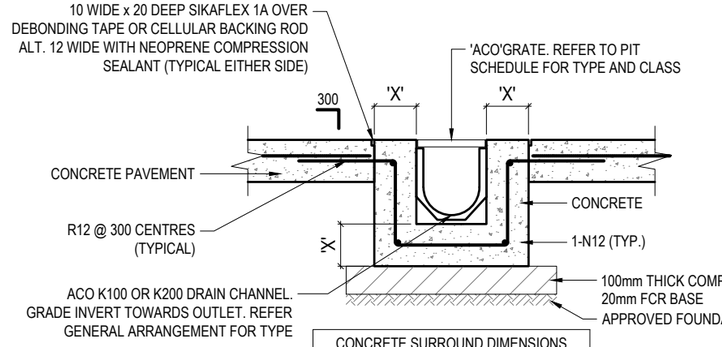

CONCRETE SURROUND DIMENSIONS	
LOAD CLASS	X
A - B	125mm
C - D	150mm

GRATED TRENCH DRAIN CONCRETE PAVEMENT
SCALE 1:20

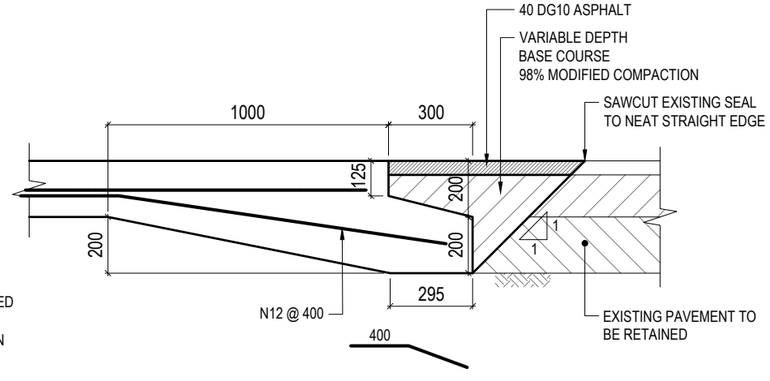

CONCRETE PAVEMENT TO HOTMIX DETAIL
SCALE 1:20

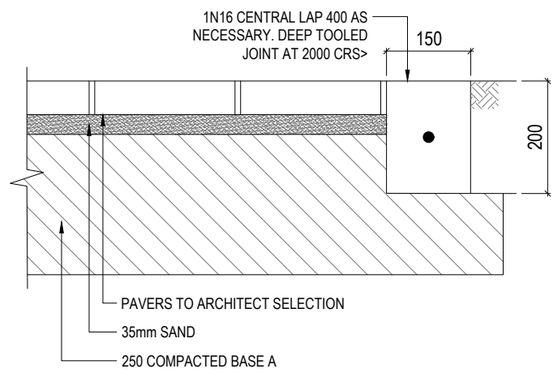

PAVEMENT DETAIL
SCALE 1:10

Risden Knightley - 991537
Registered Professional Engineer
BE Civil FIEAust CPEng NPR
27/05/2025
Tasmanian Accreditation No. CC2539X

Rev.	Amendment	Date
B	ISSUED IN RESPONSE TO RFI. ISSUED FOR TENDER	22.05.2025
A	ISSUED FOR TENDER	05/05/2025

rjk Consulting Engineers

Designed: RJK
Drawn: ASW
Endorsed: RJK
Accreditation: CC2539X

Client: AMBULANCE TASMANIA
Project: 20 UNION STREET, LONGFORD PROPOSED STATION

Drawing title: CIVIL SERVICES GENERAL DETAILS SHEET 1
Scale: AS SHOWN
Original size: A3

Date: 21.03.2025
Status: TENDER ISSUE

Drawing No: 24/25TAS082
Sheet: C01
Revision: B

Received
28.05.2025

Exhibited

Risden Knightley - 991537
Registered Professional Engineer
BE Civil FIEAust CPEng NPR
27/05/2025
Tasmanian Accreditation No. CC2539X

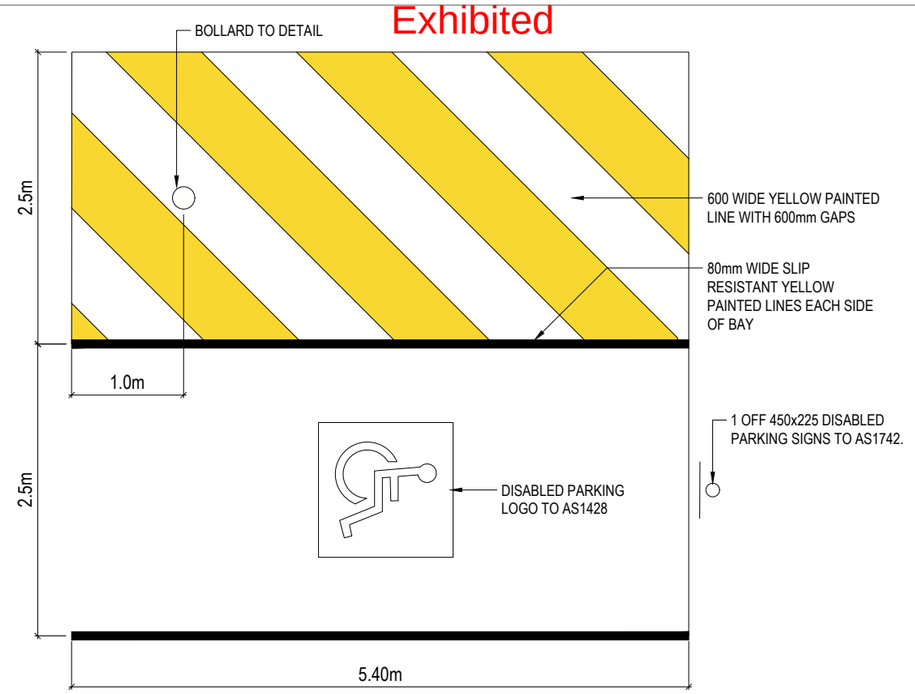

DDA PARKING SPACES
SCALE 1:10

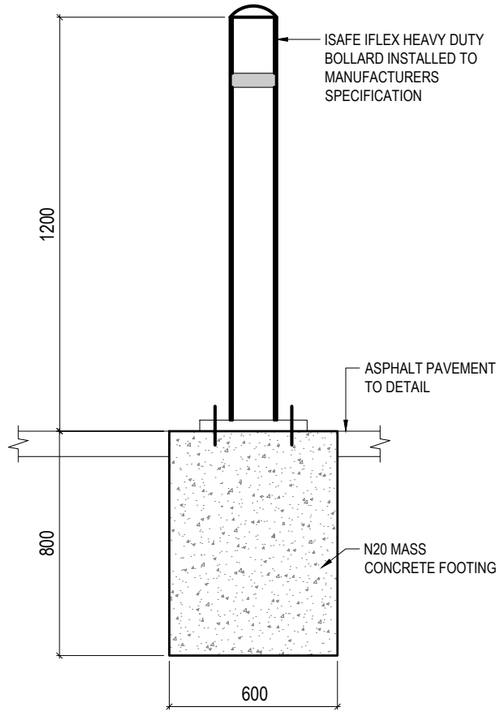

BOLLARD DETAIL
SCALE 1:20
NOTE: CONFIRM LOCATION ON SITE WITH SUPERINTENDENT PRIOR TO INSTALLATION OF BOLLARDS.

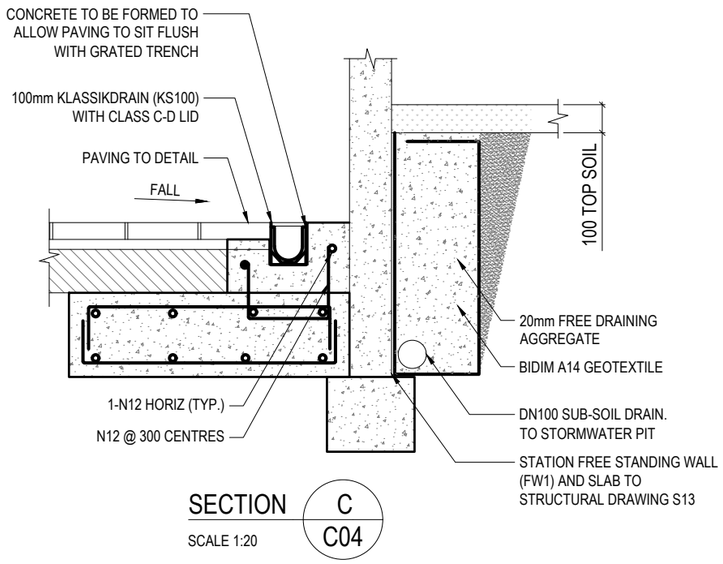

SECTION C C04
SCALE 1:20

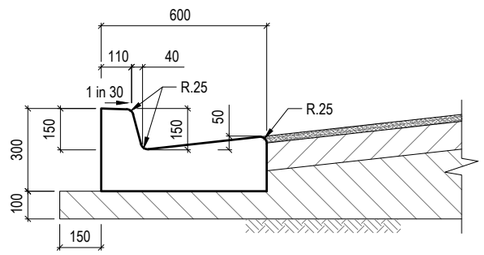

KERB AND CHANNEL (KC)
SCALE 1:20

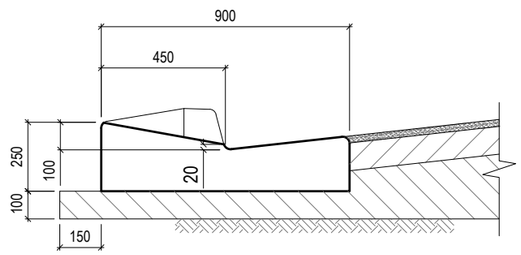

VEHICLE CROSSING (KC)
SCALE 1:20

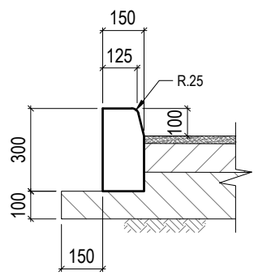

BARRIER KERB (BK)
SCALE 1:20

Rev.	Amendment	Date
B	ISSUED IN RESPONSE TO RFI. ISSUED FOR TENDER	22.05.2025
A	ISSUED FOR TENDER	05/05/2025

rjk Consulting Engineers

Designed: RJK
Drawn: ASW
Endorsed: RJK
Accreditation: CC2539X

Client: AMBULANCE TASMANIA
Project: 20 UNION STREET, LONGFORD
PROPOSED STATION

Drawing title: CIVIL SERVICES
GENERAL DETAILS SHEET 2

Scale: AS SHOWN
Original size: A3

Date: 21.03.2025
Status: TENDER ISSUE

Drawing No: 24/25TAS082
Sheet: C02
Revision: B

Received
28.05.2025

Exhibited

NOTES:

A. NEW DN 100 mm PROPERTY SEWER CONNECTION CONNECTION TO BE ISOLATED 300 mm INSIDE FRONT PROPERTY BOUNDARY & 300 mm FROM SIDE PROPERTY BOUNDARY. WORK BY 'TASWATER' AT APPLICANTS COST.

B. NEW DN 25 mm (ID 20mm) PROPERTY WATER CONNECTION & WATER METER. METER LOCATION TO BE 500 mm INSIDE FRONT PROPERTY BOUNDARY & 200 mm FROM SIDE PROPERTY BOUNDARY. WORK BY 'TASWATER' AT APPLICANTS COST.

C. ALL WATER METER CONNECTIONS FROM MAIN LINE SERVICE TO PROPERTY ENTRY SHALL BE INSTALLED AND PROVIDED BY "TASWATER" AT THE DEVELOPERS/OWNERS EXPENSE. ANY EXTRA CONNECTIONS TO REAR RESIDENCE SHALL BE PROVIDED BY "TASWATER" AT DEVELOPERS/OWNERS EXPENSE.

D. REFER DRAWING G02 FOR CIVIL NOTES ASSOCIATED WITH THE PROJECT.

E. CONTOURS SHOWN ARE SURVEY SURFACE CONTOURS. CONTOURI INTERVAL = 0.2m

F. SERVICES PLANS ONLY. THESE DRAWINGS ARE TO BE USED IN CONJUNCTION WITH APPROVED ARCHITECTURAL DRAWINGS.

G. CLEARANCES BETWEEN SERVICE LINES SHALL ADHERE TO WSA 02- 2014-3.1 TABLE 5.4 & WSA 03-2011-3.1 TABLE 5.5

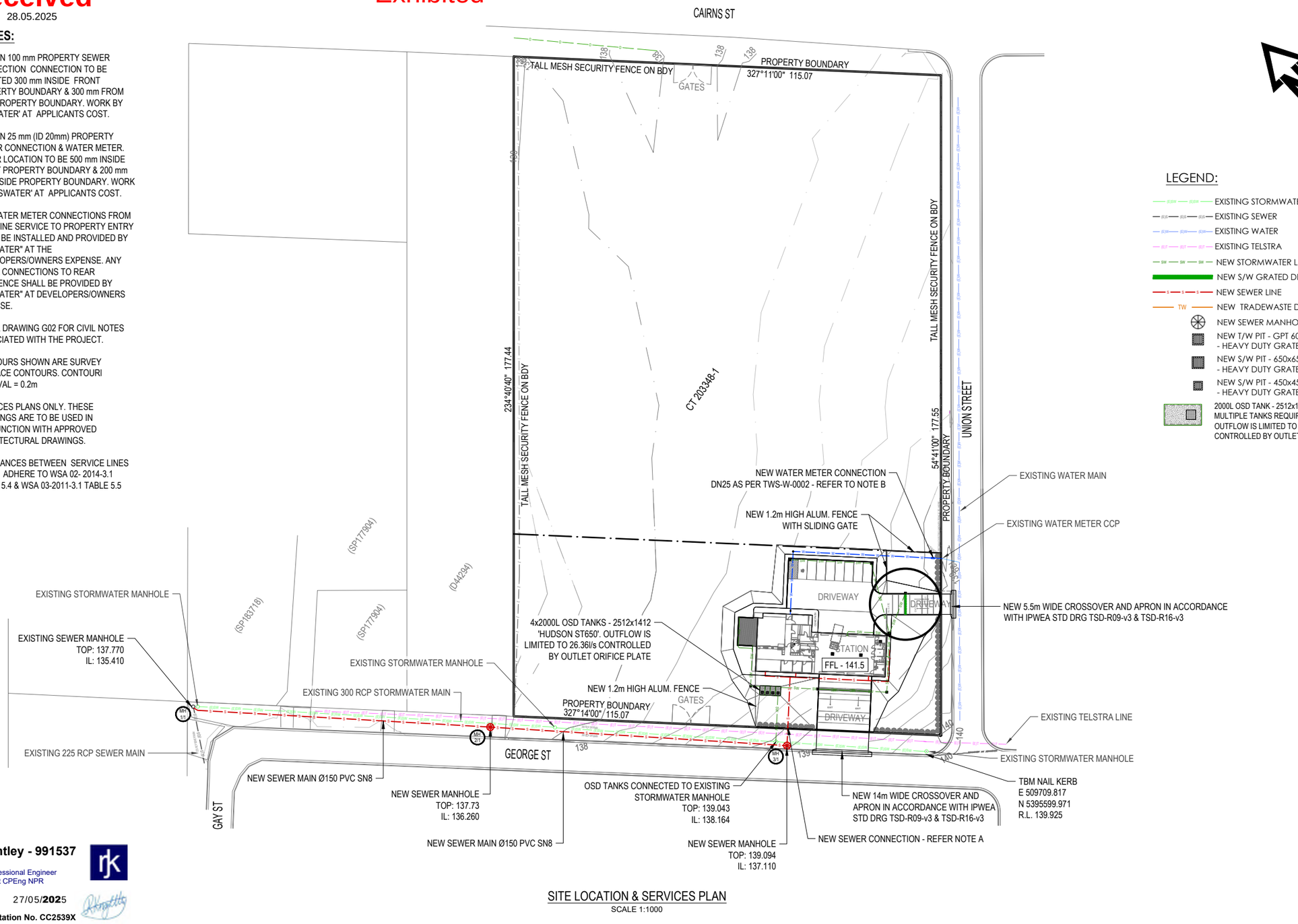

SITE LOCATION & SERVICES PLAN
SCALE 1:1000

Risden Knightley - 991537
Registered Professional Engineer
BE Civil FIEAust CPEng NPR
27/05/2025
Tasmanian Accreditation No. CC2539X

Rev.	Amendment	Date
B	ISSUED IN RESPONSE TO RFI. ISSUED FOR TENDER	22.05.2025
A	ISSUED FOR TENDER	05/05/2025

rjk Consulting Engineers

Designed: RJK
Drawn: ASW
Endorsed:
RJK
Accreditation: CC2539X

Client: AMBULANCE TASMANIA
Project: 20 UNION STREET, LONGFORD
PROPOSED STATION

Drawing title: CIVIL SERVICES
SITE LOCATION & SERVICES PLAN
Scale: 1:1000 Original size: A3

Date: 21.03.2025 Status: TENDER ISSUE
Drawing No: 24/25TAS082 Sheet: C03 Revision: B

Received
28.05.2025

Exhibited

DDA COMPLIANT CAR SPACE TO DETAIL
BOLLARD TO DETAIL
BARRIER KERB (TYPE BK) TO PERIMETER OF DRIVEWAY AND CARPARK. REFER DETAIL DRG C02. AS PER IPWEA STD DRG TSD-R14-v3
1.50m WIDE LIGHT DUTY CONCRETE PAVEMENT TO DETAIL
ACO KS200 KLASSIC DRAIN WITH CLASS GRATE TO ARCHITECTS SELECTION
PAVED COURTYARD TO DETAIL
FREESTANDING WALL TO DETAIL. FOR DETAILS REFER DRG -02 - SECTION C
EMBANKMENT MAX. 45°
NEW 1.2m HIGH ALUM FENCE
RETAIN EXIST BOUNDARY FENCE TO HERE
GATES
TALL MESH SECURITY FENCE ON BDY
PROPERTY BOUNDARY
327°14'00" 115.07
NEW SEWER MAIN Ø150 PVC SN8
OSD TANKS CONNECTED TO EXISTING STORMWATER MANHOLE TOP: 139.043 IL: 138.164
MAKE GOOD ROAD SEAL TO LIP OF NEW KERB
GEORGE STREET
CARPARK
8m WIDE DRIVEWAY
CONC PATH
TRANSITION UP TO STATION
STATION
FFL 141.5
2m WIDE TRANSITION
GRATE DRAIN
14m WIDE DRIVEWAY DOWN TO BOUNDARY
BARRIER KERB (TYPE BK) TO PERIMETER OF DRIVEWAY AND CARPARK. REFER DETAIL DRG C02. AS PER IPWEA STD DRG TSD-R14-v3
BARRIER KERB (TYPE BK) TO PERIMETER OF DRIVEWAY AND CARPARK. REFER DETAIL DRG C02. AS PER IPWEA STD DRG TSD-R14-v3
BARRIER KERB (TYPE BK) TO PERIMETER OF DRIVEWAY AND CARPARK. REFER DETAIL DRG C02. AS PER IPWEA STD DRG TSD-R14-v3
GRATE DRAIN
25% MAX FALL
DRIVEWAY
ENTRY
EXIT
SL GATE
NEW 5.5m WIDE CROSSOVER AND APRON IN ACCORDANCE WITH IPWEA STD DRG TSD-R09-v3 & TSD-R16-v3
MAKE GOOD ROAD SEAL TO LIP OF NEW KERB
EXIST. KERB
UNION STREET
PROPERTY BOUNDARY
EXISTING STORMWATER MANHOLE
TBM NAIL KERB
E 509709.817
N 5395599.971
R.L. 139.925

Risden Knightley - 991537
Registered Professional Engineer
BE Civil FIEAust CPEng NPR
27/05/2025
Tasmanian Accreditation No. CC2539X

LEGEND:
- EXISTING STORMWATER
- EXISTING SEWER
- EXISTING WATER
- EXISTING TELSTRA
- NEW STORMWATER LINE
- NEW S/W GRATED DRAIN - ACO
- NEW SEWER LINE
- NEW TRADEWASTE DRAINAGE
- NEW SEWER MANHOLE
- NEW T/W PIT - GPT 600x600 - HEAVY DUTY GRATED
- NEW S/W PIT - 650x650 'HUDSON' HP121 - HEAVY DUTY GRATED
- NEW S/W PIT - 450x450 'HUDSON' HP111 - HEAVY DUTY GRATED
- 2000L OSD TANK - 2512x1412 'HUDSON ST650'. MULTIPLE TANKS REQUIRED x 4. OUTFLOW IS LIMITED TO 26.36l/s CONTROLLED BY OUTLET ORIFICE PLATE.
- OFP OVER FLOW PATH

GENERAL NOTES:
1. REFER DRAWING G02 FOR CIVIL NOTES ASSOCIATED WITH THE PROJECT.
2. CONTOURS SHOWN ARE SURVEY SURFACE CONTOURS. CONTOUR INTERVAL = 0.2m
3. FINISHED DESIGN SURFACE LEVEL LABEL STYLE -- FDSL=141.430

GENERAL ARRANGEMENT & FSL PLAN
SCALE 1:250

Rev.	Amendment	Date
B	ISSUED IN RESPONSE TO RFI. ISSUED FOR TENDER	22.05.2025
A	ISSUED FOR TENDER	05/05/2025

rjk Consulting Engineers

Designed: RJK
Drawn: ASW
Endorsed: RJK
Accreditation: CC2539X

Client: AMBULANCE TASMANIA
Project: 20 UNION STREET, LONGFORD PROPOSED STATION

Drawing title: CIVIL SERVICES GENERAL ARRANGEMENT & FSL PLAN
Scale: 1:250 Original size: A3

Date: 21.03.2025 Status: TENDER ISSUE
Drawing No: 24/25TAS082 Sheet: C04 Revision: B

Received
28.05.2025

Exhibited

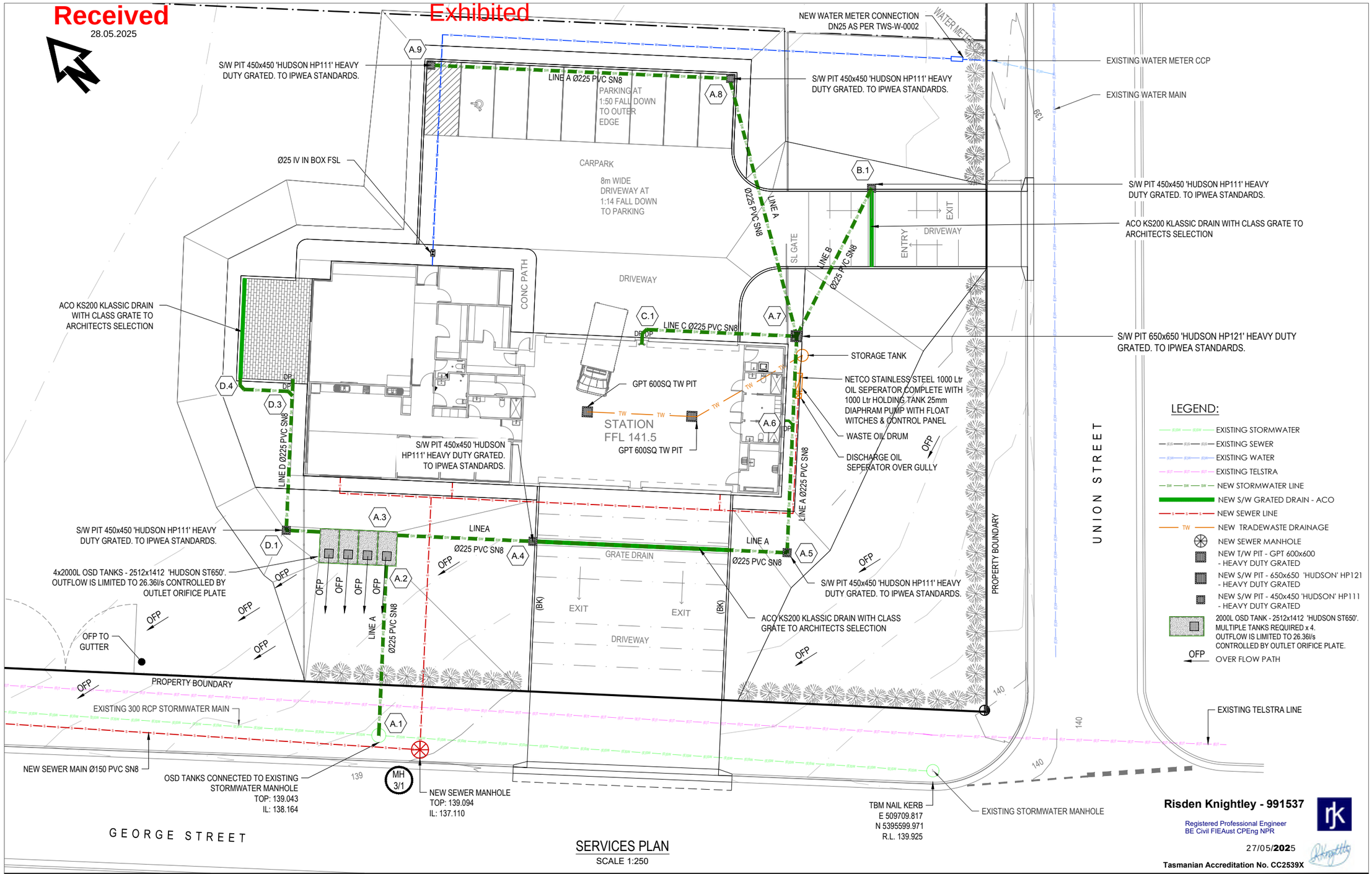

SERVICES PLAN
SCALE 1:250

Risden Knightley - 991537
Registered Professional Engineer
BE Civil FIEAust CPEng NPR
27/05/2025
Tasmanian Accreditation No. CC2539X

Rev.	Amendment	Date
B	ISSUED IN RESPONSE TO RFI. ISSUED FOR TENDER	22.05.2025
A	ISSUED FOR TENDER	05/05/2025

rjk Consulting Engineers

Designed: RJK
Drawn: ASW
Endorsed: RJK
Accreditation: CC2539X

Client: AMBULANCE TASMANIA
Project: 20 UNION STREET, LONGFORD PROPOSED STATION

Drawing title: CIVIL SERVICES SERVICES PLAN
Scale: 1:250
Original size: A3

Date: 21.03.2025
Status: TENDER ISSUE

Drawing No: 24/25TAS082
Sheet: C05
Revision: B

Received
28.05.2025

Exhibited

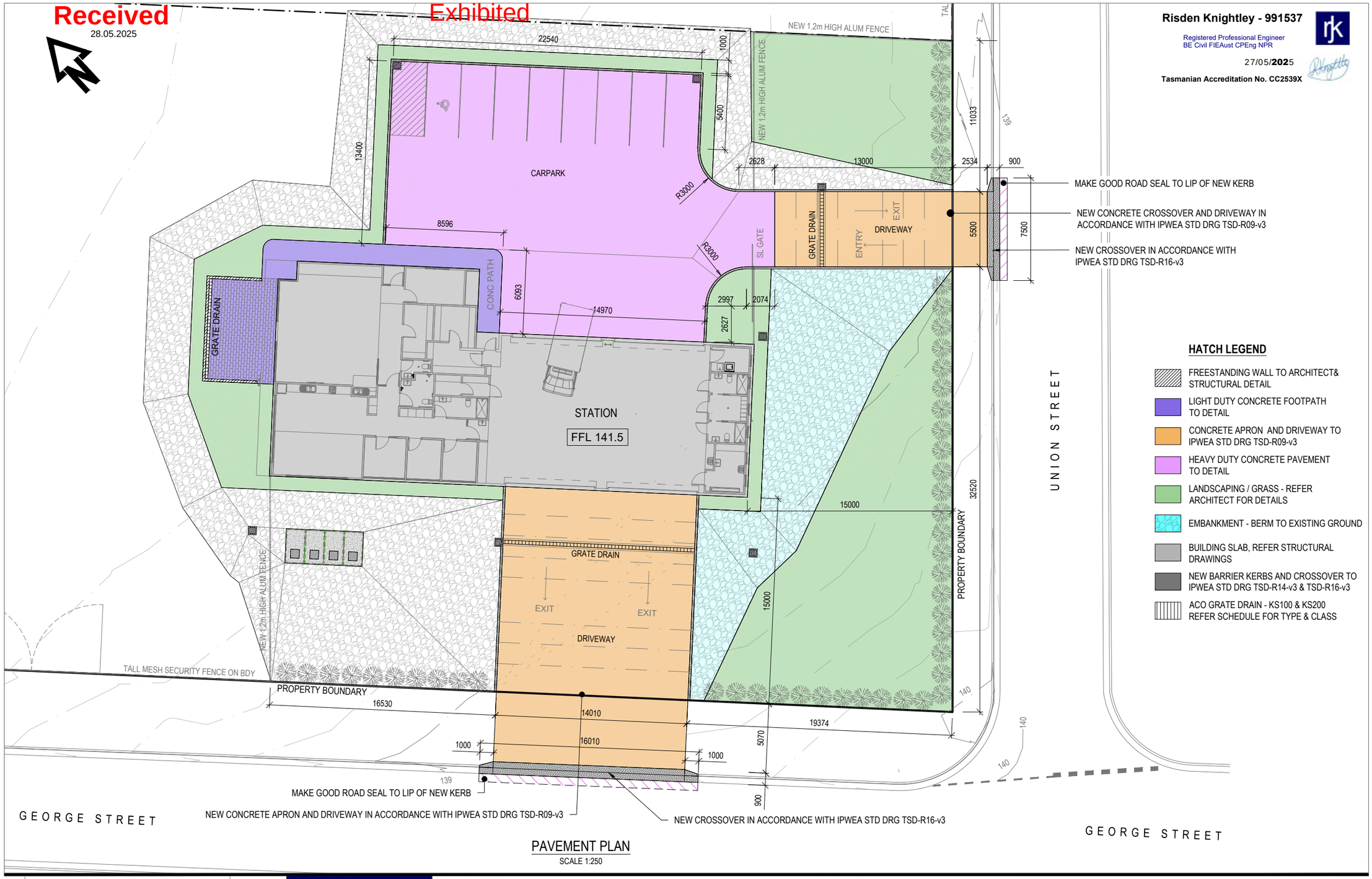

PAVEMENT PLAN
SCALE 1:250

Risden Knightley - 991537
Registered Professional Engineer
BE Civil FIEAust CPEng NPR
27/05/2025
Tasmanian Accreditation No. CC2539X

HATCH LEGEND

- FREESTANDING WALL TO ARCHITECT& STRUCTURAL DETAIL
- LIGHT DUTY CONCRETE FOOTPATH TO DETAIL
- CONCRETE APRON AND DRIVEWAY TO IPWEA STD DRG TSD-R09-v3
- HEAVY DUTY CONCRETE PAVEMENT TO DETAIL
- LANDSCAPING / GRASS - REFER ARCHITECT FOR DETAILS
- EMBANKMENT - BERM TO EXISTING GROUND
- BUILDING SLAB, REFER STRUCTURAL DRAWINGS
- NEW BARRIER KERBS AND CROSSOVER TO IPWEA STD DRG TSD-R14-v3 & TSD-R16-v3
- ACO GRATE DRAIN - KS100 & KS200 REFER SCHEDULE FOR TYPE & CLASS

Rev.	Amendment	Date
B	ISSUED IN RESPONSE TO RFI. ISSUED FOR TENDER	22.05.2025
A	ISSUED FOR TENDER	05/05/2025

rjk Consulting Engineers

Designed: RJK
Drawn: ASW
Endorsed: RJK
Accreditation: CC2539X

Client: AMBULANCE TASMANIA
Project: 20 UNION STREET, LONGFORD
PROPOSED STATION

Drawing title: CIVIL SERVICES
PAVEMENT PLAN

Scale: 1:250
Original size: A3

Date: 21.03.2025
Status: TENDER ISSUE

Drawing No: 24/25TAS082
Sheet: C06
Revision: B

Received
28.05.2025

Exhibited

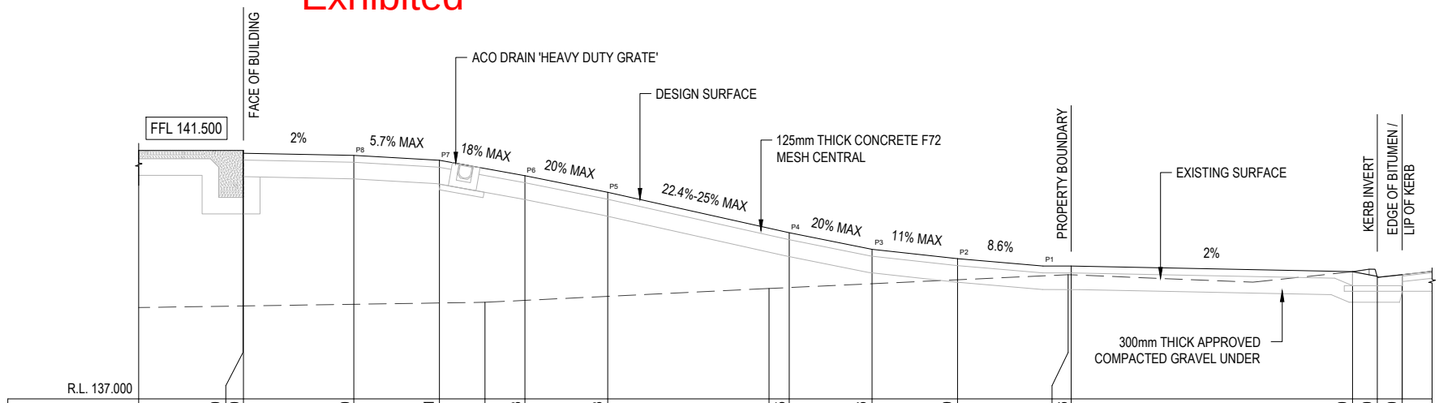

FINISHED DESIGN SURFACE LEVEL	141.500	141.450	141.410	141.321		141.043	140.743		140.005	139.706	139.539		139.406		139.300	139.200	139.250
EXISTING SURFACE		138.684			138.750			139.000				139.250					139.250
OFFSET	-15.000	-15.000	-13.000	-11.450	-10.625	-9.900	-8.400	-5.477	-5.110	-3.560	-2.010	-0.055	0.000		5.098	5.548	5.998

SECTION A
SCALE 1:100
C04

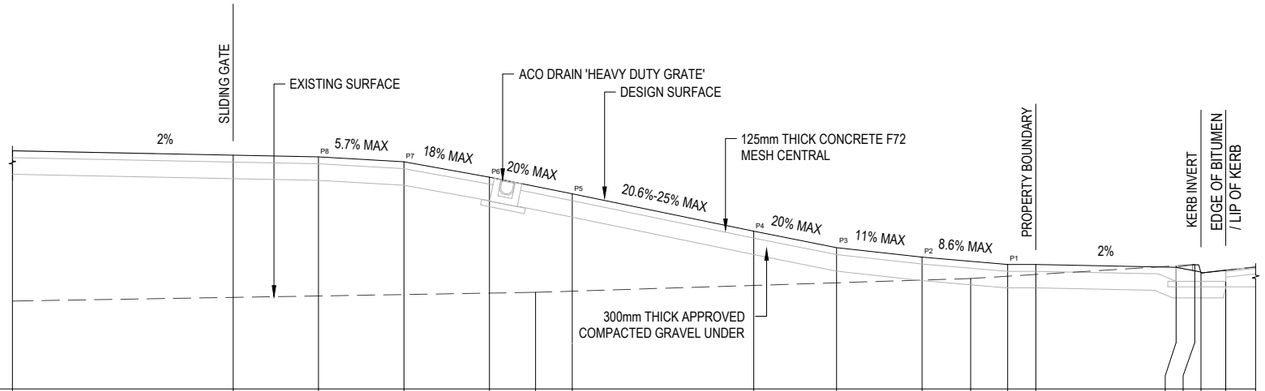

FINISHED DESIGN SURFACE LEVEL	141.314	141.234	141.203	141.115	140.836		140.536	139.854	139.554	139.388		139.256	139.256	139.200	139.139	139.100	139.150
EXISTING SURFACE	138.592					138.750					139.000				139.250		139.150
OFFSET	-18.546	-18.546	-13.000	-11.450	-9.900	-9.064	-8.400	-5.110	-3.610	-2.060	-1.180	-0.510	0.000	2.543	2.881	2.993	3.443

SECTION B
SCALE 1:100
C04

Risden Knightley - 991537
Registered Professional Engineer
BE Civil FIEAust CPEng NPR
27/05/2025
Tasmanian Accreditation No. CC2539X

Rev.	Amendment	Date
B	ISSUED IN RESPONSE TO RFI. ISSUED FOR TENDER	22.05.2025
A	ISSUED FOR TENDER	05/05/2025

rjk Consulting Engineers

Designed: RJK
Drawn: ASW
Endorsed: RJK
Accreditation: CC2539X

Client: AMBULANCE TASMANIA
Project: 20 UNION STREET, LONGFORD
PROPOSED STATION

Drawing title: CIVIL SERVICES
DRIVEWAY PROFILE SECTIONS

Scale: 1:100
Original size: A3

Date: 21.03.2025
Status: TENDER ISSUE

Drawing No: 24/25TAS082
Sheet: C07
Revision: B

Received
28.05.2025

Exhibited

HYDRAULIC SERVICES NOTES: WATER RETICULATION

WC	15mm CW IV TO CISTERN.
B	15mm CW & MW IV TO BASIN.
SHR	15mm CW & MW IV TO SHOWER.
LT	20mm CW & HW IV TO LAUNDRY TUB WITH CONNECTION TO WM.
CS	15mm CW & HW POINTS TO TAPWARE.
HWC	RHEEM 315L COMERCIAL (product code:613 315) WITH ALL ANCILLARY VALVES.
	- INSTALL RHEEM DELUXE DUAL STAGE CIRCULATING PUMP ADJACENT TO CYLINDER.
RPZR	20mm TYCO RPZD ON HW & CW SERVICE. INSTALL SS WALL BOX HOUSING IN STORE AREA.
TMV	Ø20 CW & HW TO AQUABLEND 1500 TMV IN STAINLESS STEEL WALLBOX 400mm AFFL.
HT	Ø15 CW HOSE TAP WITH INTEGRAL VACCUM BREAKER. CONFIRM EXACT LOCATIONS ONSITE.
SK	20mm CW & 15mm HW IV FOR SINK & DISHASHER.
CS	Ø15 CW & HW TO CLEANERS SINK

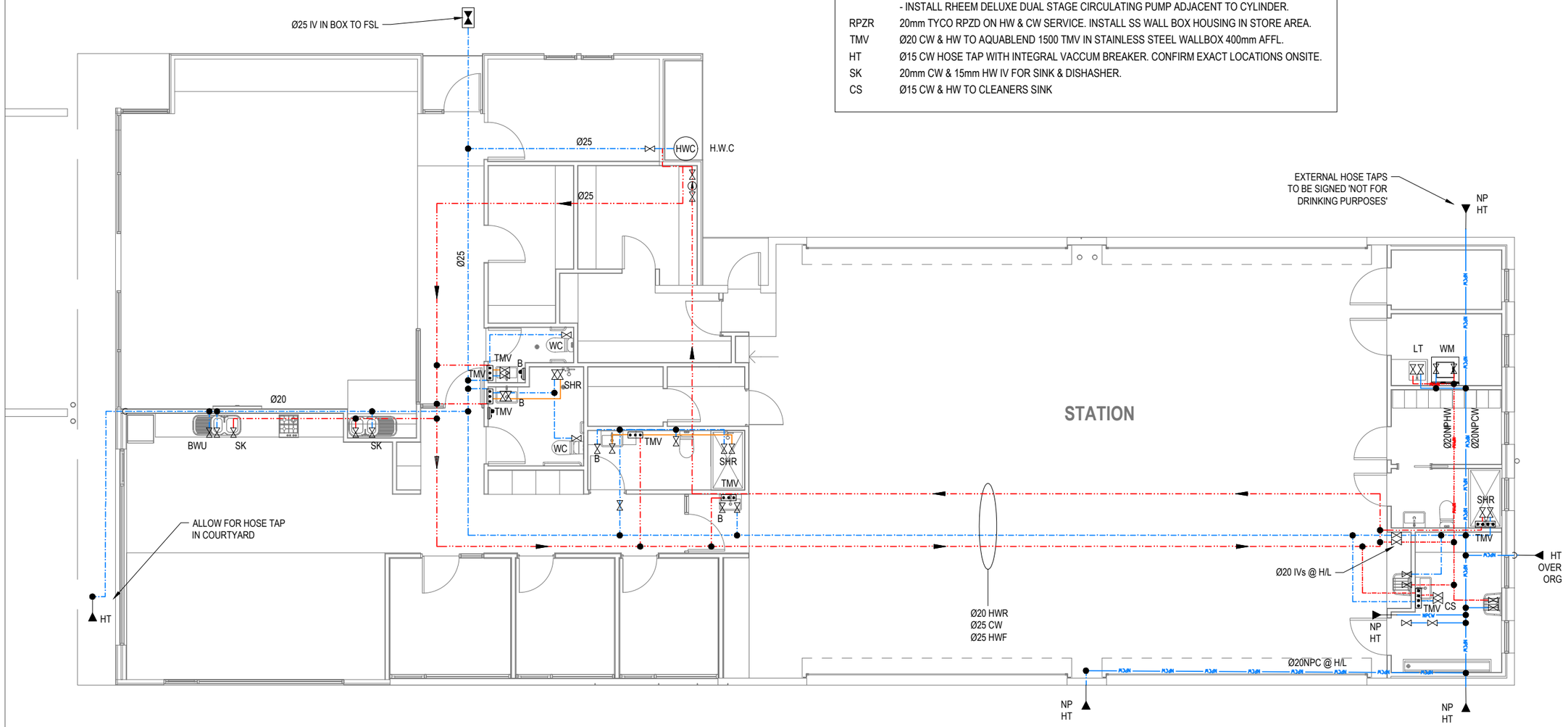

Risden Knightley - 991537
Registered Professional Engineer
BE Civil FIEAust CPEng NPR
27/05/2025
Tasmanian Accreditation No. CC2539X

Rev.	Amendment	Date
B	ISSUED IN RESPONSE TO RFI. ISSUED FOR TENDER	22.05.2025
A	ISSUED FOR TENDER	05/05/2025

rjk Consulting Engineers

Designed: RJK
Drawn: ASW
Endorsed: RJK
Accreditation: CC2539X

Client: AMBULANCE TASMANIA
Project: 20 UNION STREET, LONGFORD
PROPOSED STATION

Drawing title: HYDRAULIC SERVICES
STATION WATER RETICULATION

Scale: 1:100 Original size: A3

Date: 21.03.2025 Status: TENDER ISSUE

Drawing No: 24/25TAS082 Sheet: C08 Revision: B

Received
28.05.2025

Exhibited

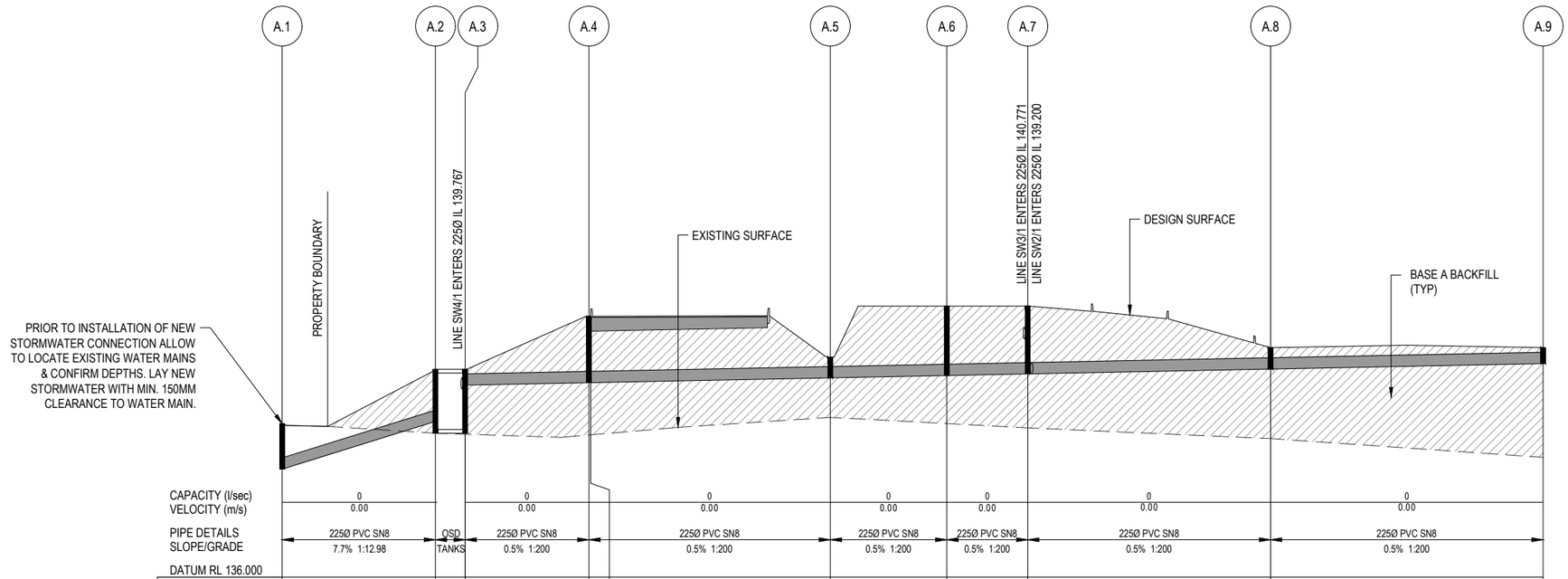

CAPACITY (l/sec)	0	0	0	0	0	0	0	0	0
VELOCITY (m/s)	0.00	0.00	0.00	0.00	0.00	0.00	0.00	0.00	0.00
PIPE DETAILS	225Ø PVC SN8	OSD	225Ø PVC SN8	225Ø PVC SN8	225Ø PVC SN8	225Ø PVC SN8	225Ø PVC SN8	225Ø PVC SN8	225Ø PVC SN8
SLOPE/GRADE	7.7% 1:12.98	TANKS	0.5% 1:200	0.5% 1:200	0.5% 1:200	0.5% 1:200	0.5% 1:200	0.5% 1:200	0.5% 1:200
DATUM RL 136.000									
HGL	0.000	0.000	0.000	0.000	0.000	0.000	0.000	0.000	0.000
DEPTH TO INVERT	0.912	1.034	0.318	1.329	0.298	0.414	1.390	1.359	0.428	0.318
INVERT LEVEL	138.164	139.130	139.846	139.888	140.926	139.992	140.039	140.071	140.168	140.278
FINISHED SURFACE	139.076	140.164	140.164	141.224	141.224	140.406	141.429	141.430	140.596	140.596
EXISTING SURFACE	139.076	138.882	138.863	138.848	138.851	139.220	139.076	138.989	138.775	138.400
CHAINAGE	0.000	12.282	14.794	24.590	24.740	43.942	53.280	59.769	79.231	101.078
	12.282		2.512	9.796	0.15	19.202	9.338	6.489	19.477	21.847

STORMWATER PROFILE LINE A

STORMWATER LONGSECTION

SCALE: 1:500 HORIZONTAL
SCALE: 1:100 VERTICAL

Risden Knightley - 991537
Registered Professional Engineer
BE Civil FIEAust CPEng NPR
27/05/2025
Tasmanian Accreditation No. CC2539X

Rev.	Amendment	Date
B	ISSUED IN RESPONSE TO RFI. ISSUED FOR TENDER	22.05.2025
A	ISSUED FOR TENDER	05/05/2025

rjk Consulting Engineers

Designed: RJK
Drawn: ASW
Endorsed: RJK
Accreditation: CC2539X

Client: AMBULANCE TASMANIA
Project: 20 UNION STREET, LONGFORD
PROPOSED STATION

Drawing title: CIVIL SERVICES
STORMWATER PROFILES
SHEET 1
Scale: 1:500 HORIZ ; 1:100 VERT
Original size: A3

Date: 21.03.2025
Status: TENDER ISSUE
Drawing No: 24/25TAS082
Sheet: C09
Revision: B

Received
28.05.2025

Exhibited

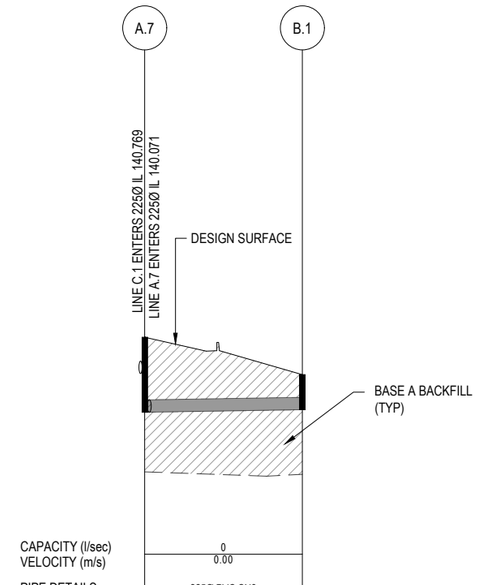

CAPACITY (l/sec) / VELOCITY (m/s)	0 / 0.00		
PIPE DETAILS / SLOPE/GRADE	225Ø PVC SN8 0.5% 1:200		
DATUM RL 136.000			
	0.000	0.000	
DEPTH TO INVERT	1.358	0.635	
INVERT LEVEL	140.071	140.117	
FINISHED SURFACE	141.429	140.752	
EXISTING SURFACE	138.991	138.948	
CHAINAGE	0.000	19.477	
	19.477		

STORMWATER PROFILE LINE B

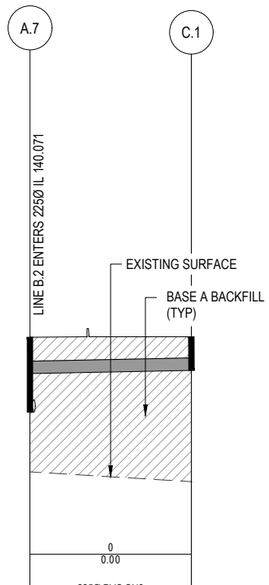

	0 / 0.00	
	225Ø PVC SN8 0.5% 1:200	
	0.000	0.000
	0.659	0.608
	140.771	140.830
	141.430	140.438
	138.989	138.814
	0.000	11.700
	11.700	

STORMWATER PROFILE LINE C

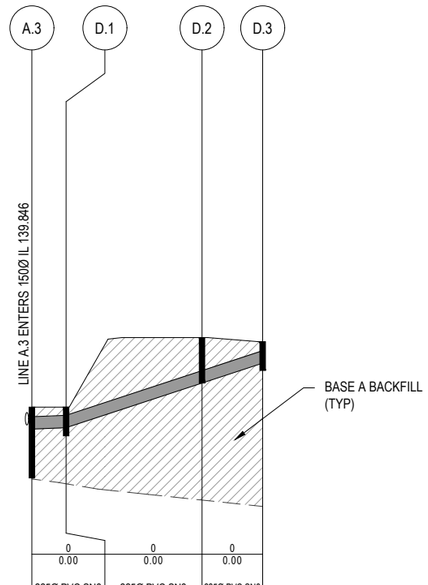

	0 / 0.00	0 / 0.00	0 / 0.00
	225Ø PVC SN8 0.5% 1:200	225Ø PVC SN8 0.5% 1:200	225Ø PVC SN8 0.5% 1:200
	0.000	0.000	0.000
	0.397	0.373	0.823
	139.767	139.791	140.600
	140.164	140.164	141.424
	138.863	138.777	138.481
	0.000	2.481	12.333
	2.481	9.851	4.395

STORMWATER PROFILE LINE D

STORMWATER LONGSECTION

SCALE: 1:400 HORIZONTAL
SCALE: 1:100 VERTICAL

Risden Knightley - 991537
Registered Professional Engineer
BE Civil FIEAust CPEng NPR
27/05/**202**5
Tasmanian Accreditation No. CC2539X

Rev.	Amendment	Date
B	ISSUED IN RESPONSE TO RFI. ISSUED FOR TENDER	22.05.2025
A	ISSUED FOR TENDER	05/05/2025

rjk Consulting Engineers

Designed: RJK
Drawn: ASW
Endorsed: RJK
Accreditation: CC2539X

Client: AMBULANCE TASMANIA
Project: 20 UNION STREET, LONGFORD PROPOSED STATION

Drawing title: CIVIL SERVICES STORMWATER PROFILES SHEET2
Scale: 1:400 HORIZ ; 1:100 VERT
Original size: A3

Date: 21.03.2025
Status: TENDER ISSUE
Drawing No: 24/25TAS082
Sheet: C10
Revision: B

Received
28.05.2025

Exhibited

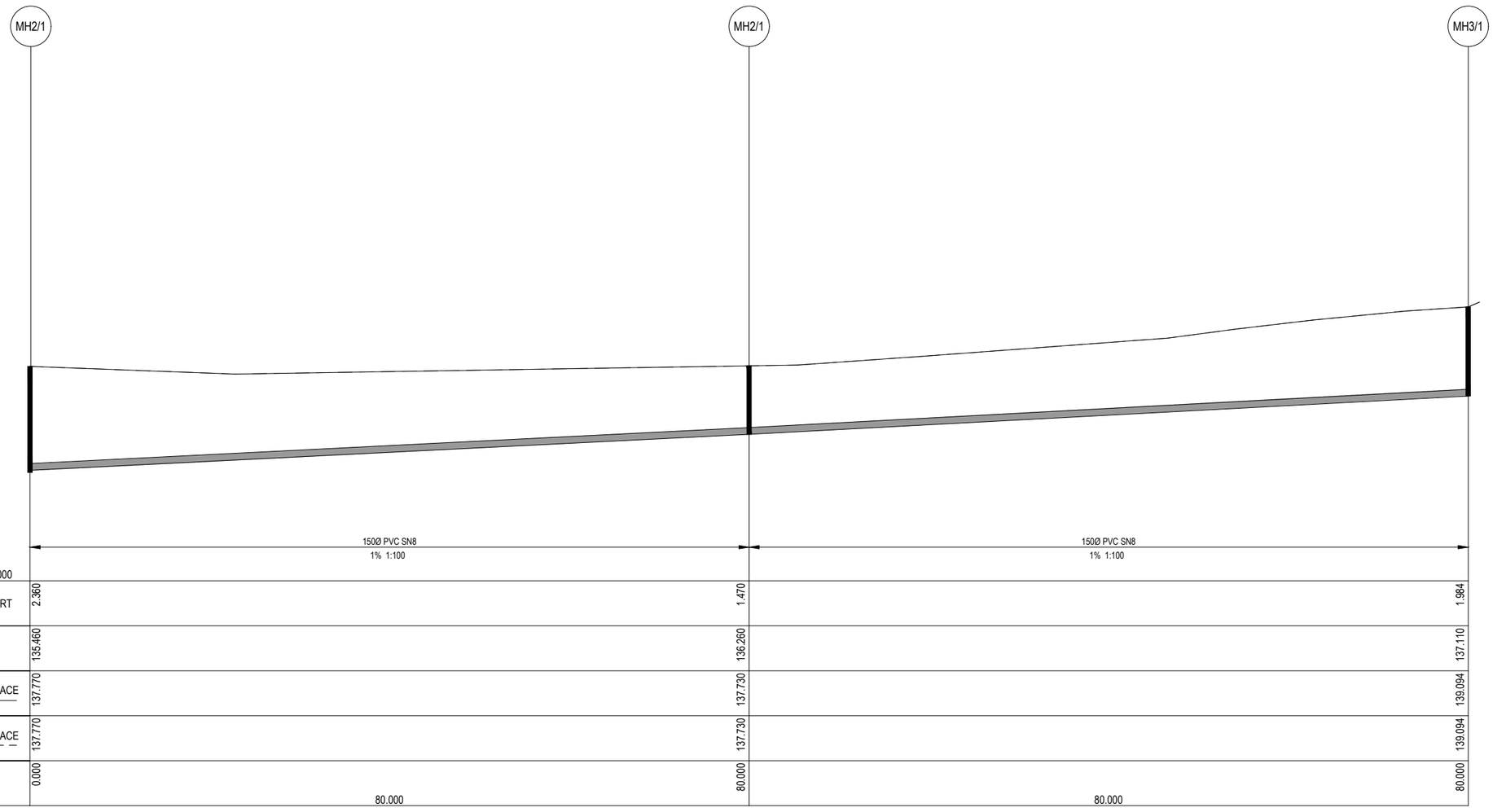

SEWER LINE 1

SEWER LONGSECTION

SCALE: 1:500 HORIZONTAL
SCALE: 1:100 VERTICAL

Risden Knightley - 991537
Registered Professional Engineer
BE Civil FIEAust CPEng NPR
27/05/2025
Tasmanian Accreditation No. CC2539X

Rev.	Amendment	Date
B	ISSUED IN RESPONSE TO RFI. ISSUED FOR TENDER	22.05.2025
A	ISSUED FOR TENDER	05/05/2025

rjk Consulting Engineers

Designed: RJK
Drawn: ASW
Endorsed: RJK
Accreditation: CC2539X

Client: AMBULANCE TASMANIA
Project: 20 UNION STREET, LONGFORD
PROPOSED STATION

Drawing title: CIVIL SERVICES
SEWER PROFILES
SHEET1

Scale: 1:500 HORIZ ; 1:100 VERT
Original size: A3

Date: 21.03.2025
Status: TENDER ISSUE

Drawing No: 24/25TAS082
Sheet: C11
Revision: B

Received
28.05.2025

Exhibited

CONSULTING ENGINEERS

FLOOD HAZARD REPORT

Report prepared for:

The Crown – Department of Health – Ambulance Station

20 Union Street

Longford TAS 7301

CONTACT
RJK CONSULTING ENGINEERS

Phone:
0400 642 462

Address:
Po Box 128
Prospect TAS 7250

Email:
mail@rjkconsultants.com.au

Received
28.05.2025

Exhibited

Document Contact

RJK Consulting Engineers
ABN: 71 162 701 528

Risden Knightley
BE (Civil), Ass Dip Civil Eng, FIEAust, CC 2539X

Telephone: 0400 642 4629

Document Information

Client:	The Crown – Department of Health
Project Reference:	24/25 TAS 082
Date:	28h May 2025
Version Number:	V2
Effective Date	28th May 2025
Date Approved:	28th May 2025

Document History

Version	Effective Date	Description of Revision	Prepared by:	Reviewed by:
V2	28/05/2025	As per RFI	Risden Knightley	Risden Knightley

© RJK Consulting Engineers. Copyright in the whole and every part of this document belongs to RJK Consulting Engineers and may not be used, sold, transferred, copied or reproduced in whole or in part in any manner or form or in or on any media to any person other than by agreement with RJK Consulting Engineers.

This document is produced by RJK Consulting Engineers solely for the benefit and use by the client in accordance with the terms of the engagement. RJK Consulting Engineers does not and shall not assume any responsibility or liability whatsoever to any third party arising out of any use or reliance by any third party on the content of this document.

Received
28.05.2025

Exhibited

Table of Contents

Table of Contents iii
List of Tables iii
Table of Figures iii
1. Introduction 4
2. Author Details 4
3. Site Details 4
3.1 Site Identification 4
4. Site Description 5
4.1 Topography 5
4.2 Surface Water 5
4.3 Regional Geology 5
5. Flood Hazard 6
6. Conclusions and Recommendations 9

List of Tables

Table 1: Site Details. 4
Table 2: Tasmania Planning Scheme Summary C12.5.2 7
Table 3: Tasmania Planning Scheme Summary C12.6.1 8

Table of Figures

Figure 1: Site location. 4
Figure 2: LIDAR Contours (AHD). 5
Figure 3: Flood hazard mapping. 6
Figure 4: Flood hazard, risk matrix. 7

Appendices

Flood Risk Assessment
Flood Management Plan

Received
28.05.2025

Exhibited

1. Introduction

RJK Consulting Engineers has been commissioned by Arcadia Architecture on behalf of The Crown – Department of Health to undertake a Flood Hazard Report relating to a proposed development at 20 Union Street, Longford, TAS, 7301 (the site).

The survey consists of a desktop review in relation to a potential flood and an analysis of any associated risk to development on the site.

2. Author Details

The report has been prepared by Reuben McCormack and finalised by Risden Knightley who is a qualified civil engineer with over 20 years' experience in assessing properties to withstand flood impacts and understanding flood levels.

3. Site Details

3.1 Site Identification

Property Address:	20 Union Street, Longford, TAS, 7301
Property Id:	7588388
Title Reference:	200276/1
Client:	The Crown – Department of Health

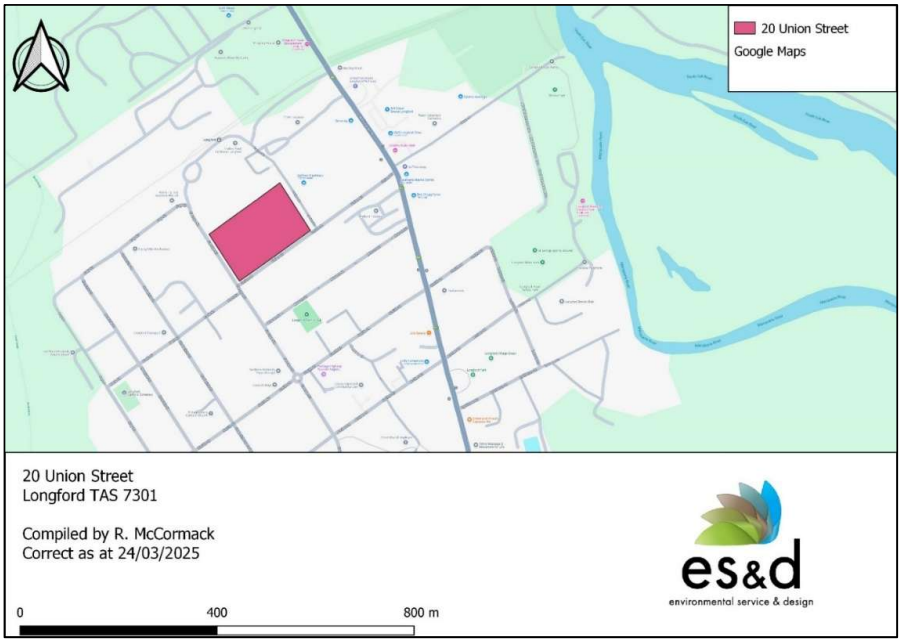

Figure 1: Site location.

Received
28.05.2025

Exhibited

4. Site Description

The subject site is located in a light industrial zone on the outskirts of Longford. The proposed development is a 1,760m^2 area including an ambulance station, garage, sleeping areas, toilets and common room and parking spaces. Development is expected to take six to twelve months once approval has been received. The lifetime of the development is estimated 50 years.

4.1 Topography



Figure 2: LIDAR Contours (AHD).

LiDAR contours (Figure 2) show the site to vary in elevation between 138m and 140m Australian Height Datum (AHD) there is a gentle increase from the north to south corners with small rises in the northwest edge.

4.2 Surface Water

The nearest surface water body is the South Esk and Macquarie Rivers which are approximately 640m to the northeast of the property. There is also a minor creek (Back Creek) 350m to the west of the site.

4.3 Regional Geology

The Mineral Resources Tasmania Digital Geological Atlas, 1:25,000 Series, Longford sheet, shows the site to be located on Cenozoic aged sediments described as "…*undifferentiated alluvium of minor streams and piedmont gravel…"*

Received
28.05.2025

Exhibited

5. Flood Hazard

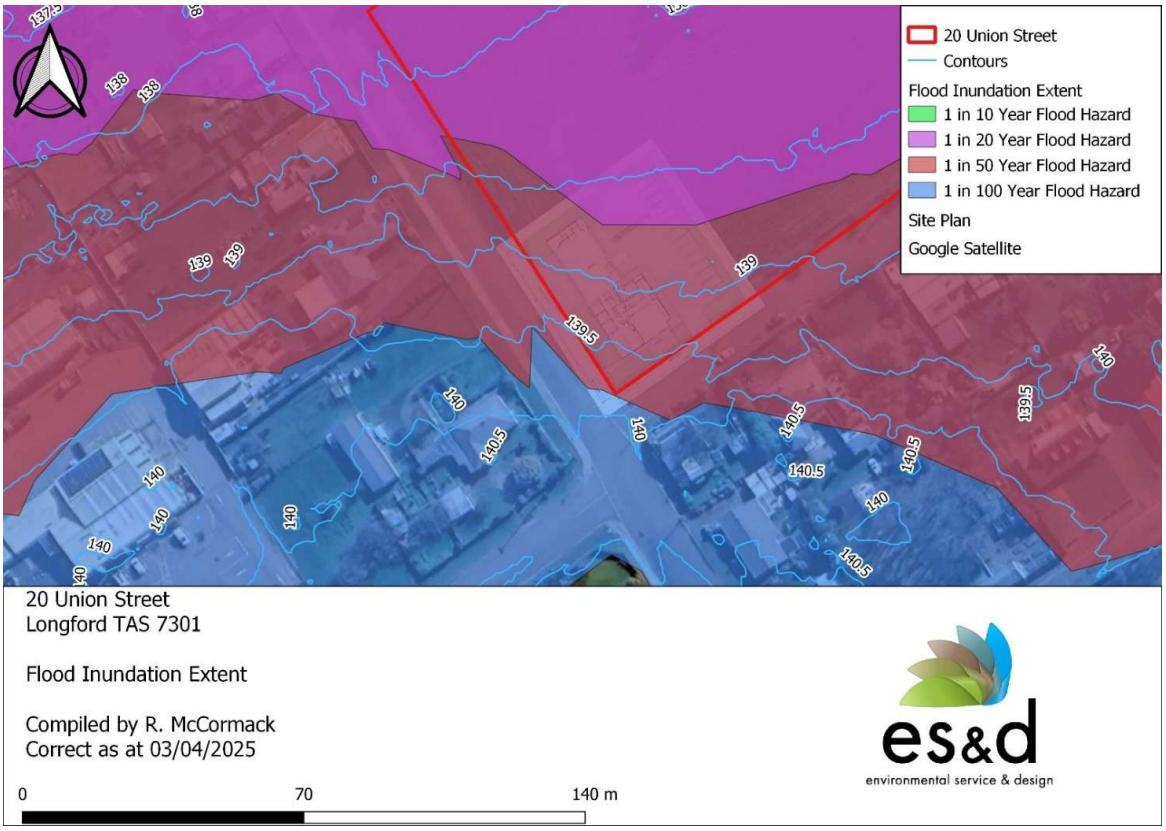

Figure 3: Flood hazard mapping.

Flood hazard mapping (Figure 3) shows the proposed building area to be impacted by 1 in 50 and 1 in 100 year flood events with a 1 in 20 year event reaching the car park. 1 in 100 year flood extent rises to between 140.5m and 141.2m AHD. The recommended FFL of a habitable area should be a minimum 0.3m above the estimated maximum flood level and therefore be 141.5m AHD.

Access to the property is via Union Street with garage access on George Street. Both access points would be inundated with at least 1m of water, making it at a minimum a H3 area (Figure 4). As H3 areas are deemed unsafe for vehicles, it must be assumed that there is no vehicle access to the property during 1 in 100 year flood event.

Under the Tasmania Planning Scheme, the site is deemed critical use due to an ambulance station being an emergency service. There will be no permanent residents onsite, however nightshift workers have the option to sleep onsite while waiting at the station for callouts. In the event of a 1 in 100 year flood ambulance crews will not be able to return to the station. In the event of flood warnings, the ambulance crew should move to higher ground, or an alternate station as directed by Ambulance Tasmania.

The proposed development will not impact the flow of the river. The development size is insignificant when compared to the catchment area of the river. The ambulance station will therefore not cause or contribute to the occurrence of flooding on the site or adjacent land.

Received
28.05.2025

Exhibited

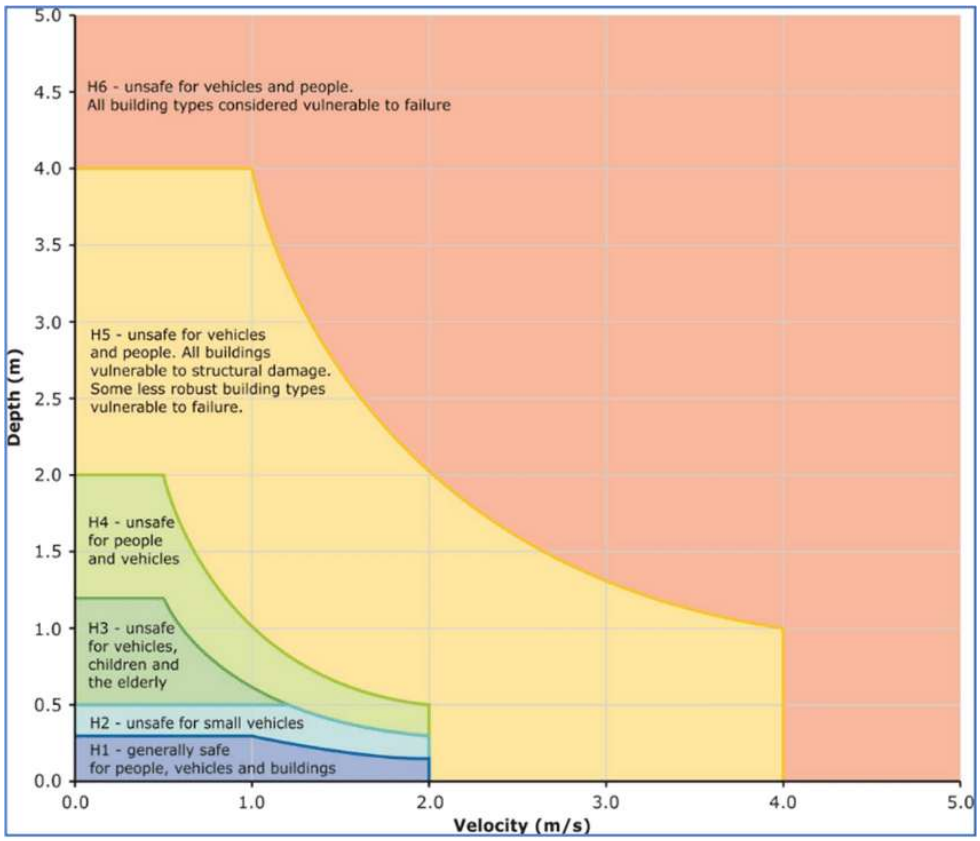

Figure 4: Flood hazard, risk matrix.

Table 1: Tasmania Planning Scheme Summary C12.5.2.

C12.5.2 Critical use, hazardous use or vulnerable use	
Objective: That critical, hazardous and vulnerable uses, located within a flood-prone hazard area can achieve and maintain a tolerable risk from flood.	
Performance Criteria	
P1	
A critical, hazardous, or vulnerable use within a flood-prone hazard area must achieve a tolerable level of risk from flood, having regard to:	Response from flood report.
(a) The type form and duration of the use; and	The proposed development is for an Ambulance station. Expected lifetime of the station is 50 years
(b) A flood hazard report that demonstrates that: (i) Any increase in the level of risk from flood does not warrant any specific hazard reduction or protection measures; or (ii) The use can achieve and maintain a tolerable risk from a 1% annual exceedance probability flood event for the intended life of the use without requiring any flood protection measures.	Raising the floor level of the building will reduce the impacts of flood waters on stores and equipment.

Received
28.05.2025

Exhibited

P2	
In addition to the requirements in clause C12.5.2 P1, a critical use within a flood-prone hazard area must achieve and maintain a tolerable risk, having regard to:	Response from flood report.
(a) The ability of the use to function and maintain service during the flood event and recovery period;	Ambulance crews are to move offsite during flood events and are to assume the station is inaccessible. Crews will coordinate with SES and other emergency response services on access to any cutoff locations and alternate routes between patients and hospitals.
(b) Any interruption to the operation of the critical use in locations external to the immediate impact of the flood;	Ambulance crews will be moved to a nearby station as directed by Ambulance Tasmania to maintain appropriate response times.
(c) The creation of risk to the health or safety of people from damage or disruption to: (i) A water supply service; or (ii) The drainage and treatment of waste water;	N/A
(d) the advice contained in a flood hazard report; and	Detailed in report.
(e) any advice from a State authority, regulated entity or a council.	Detailed in report.

Table 2: Tasmania Planning Scheme Summary C12.6.1.

C12.6.1 Buildings and works within a flood-prone hazard area	
Objective: That (a) building and works within a flood-prone hazard area can achieve and maintain a tolerable risk from flood; and (b) buildings and works do not increase the risk from flood to adjacent land and public infrastructure.	
Performance Criteria	
P1.1	
Buildings and works within a flood-prone hazard area must achieve and maintain a tolerable risk from a flood, having regard to:	Response from flood report
(a) The type, form, scale and intended duration of the development;	Construction will take 6-12 months. Workers should monitor emergency broadcast media particularly for warnings of flooding during heavy rainfall and evacuate the site if necessary.
(b) Whether any increase in the level of risk from flood requires any specific hazard reduction or protection measures;	During construction, plant, equipment and building material should be moved off site if there is forecasted heavy rainfall and flooding.
(c) Any advice from a State authority, regulated entity or a council; and	Detailed in report.
(d) The advice contained in a flood hazard report.	Detailed in report.

Received
28.05.2025

Exhibited

C12.6.1 Buildings and works within a flood-prone hazard area	
P1.2	
A flood hazard report also demonstrates that:	Response from flood report
(a) Do not cause or contribute to flood on the site, on adjacent land or public infrastructure; and	Construction of an ambulance station will not increase the potential of flooding on or adjacent to the site.
(b) Can achieve and maintain a tolerable risk from a 1% annual exceedance probability flood event for the intended life of the use without requiring any flood protection measures.	Design of habitable floor levels to be minimum 0.3 m above the maximum height level of a 1% AEP flood event reduced the risk to occupants to acceptable levels.

6. Conclusions and Recommendations

RJK Consulting Engineers were commissioned by Department of Health Tasmania to conduct a flood hazard report for a proposed development at 20 Union Street, Longford, TAS, 7301.

The flood levels used for FFL were greater than the Council's adopted modelling. The Council's requirement to show a FFL of 140.16m AHD is incorrect, this is Council's minimum adopted flood level and based on this modelling the FFL should be 140.46m AHD. Our recommendation of a 141.5m AHD FFL is over a metre above this and poses a tolerable and acceptable risk to the development.

Further, SES modelling shows 143.79m AHD. It is not reasonable to raise the FFL an additional 3m beyond the levels of Council. This statement is made based on the additional cost involved in flood proofing the building or if Ambulance Tasmania would accept that cost.

Additionally, the SES FFL of 143.79m AHD would see almost half of Longford being inundated in this scenario.

As Ambulance Tasmania have indicated as their acceptable tolerable risk, they will instigate additional measure to make sure both ambulances are removed from site. As this stations usually consists of two ambulances but only one is crewed (risk measure that if one crew finishes late there is a vehicle ready for the next crew at start time).

Ambulance Tasmania have indicated that if there is a flood threat, then the second ambulance should be moved to a different staging area so that, in the event the site is inundated the ambulances are not damaged and remain serviceable for use.

This has been added as a separate item in report addressing Council's concerns.

The following are recommended for the proposed development to achieve and maintain an appropriate level of risk form a flood event based on the supplied information.

- The FFL of the habitable area of the station should be at minimum 141.5m AHD
- Vehicles should not be parked in the car park when there is threat of flooding. This includes personal vehicles. Any uncrewed ambulances may be moved to higher ground as directed by Ambulance Tasmania.
- A Flood Management Plan should be developed and made accessible to all Ambulance Tasmania staff and any other users of the site. The Flood Management Plan should highlight alternate stations, likely routes that will be cut off in 1 in 100 year flood events, packing list of additional stores to carry in the ambulance to maintain function without returning to station.

Received
28.05.2025

Exhibited

It is assumed that the site will not fall under the hazardous or vulnerable use categories as defined in the Tasmania Planning Scheme. Should the proposed use fall under either of these categories during the lifetime of the development this Flood Hazard Report will need to be reassessed and possibly changed.

Based on the information contained within this report including the above assumptions and recommendations, the proposed development can achieve and maintain a tolerable level of risk for the lifetime of the development without the need for additional flood protection measures. The development therefore complies with C12.5 and C12.6 of the Tasmania Planning Scheme – Northern Midland Council.

Should you require clarification of any aspect of this report, please contact undersigned.



Risden Knightley

BE (Civil), Ass Dip Civil Eng, FIEAust, CC 2539X

Received
28.05.2025

Exhibited

Flood Risk Assessment

20 Union Street Longford TAS 7301

1. Context

a. Location & Background

The subject site is located in a light industrial zone on the outskirts of Longford. The proposed development is a 1,760m² area including an ambulance station, garage, sleeping areas, toilets and common room and parking spaces. The lifetime of the development is estimated to be 50 years. Flood hazard mapping indicates a one in one-hundred year flood event will engulf the property from the north.

b. Purpose

This assessment aims to evaluate the flood risk to the property using the National Emergency Risk Assessment Guidelines (NERAG) and to provide recommendations for managing or reducing the associated risk.

2. Flood Risk

a. Hazard

- Type: Riverine Flooding (overbank flow)
- Source: South Esk and Macquarie Rivers
- Trigger: Intense or prolonged rainfall causing catchment saturation and water level rise.

b. Exposed Elements

- Residential structure and contents
- Occupants (including children and elderly residents)
- Access/egress routes
- Electrical infrastructure.

3. Risk Analysis

a. Consequence Assessment

Impact Area	Potential Impact	Rating
People	Potential for injury or entrapment, especially at night or for vulnerable people.	Moderate
Property/Assets	Possible inundation of ground floor level; minor damage to structure and belongings.	Moderate
Services	Possible loss of power, water, and sewerage.	Moderate
Access/Egress	Inaccessibility during flood peak.	Major
Recovery	Costs and time for recovery and reoccupation.	Moderate

Overall Consequence Rating: Major

Received
28.05.2025

Exhibited

b. Likelihood Assessment

Based on flood mapping and available data, the property is within the 1% Annual Exceedance Probability (AEP) flood zone, giving a likelihood rating of unlikely.

4. Risk Evaluation

Using the NERAG Risk Matrix:

- Consequence: Major
- Likelihood: Unlikely
- Overall Risk Rating: High.

5. Risk Treatment Options

a. Existing Controls

- Property raised at least 0.3m above projected flood level
- Local flood warning systems via State Emergency Services (SES)
- Awareness of flood risk through development overlays.

b. Recommended Treatments

Treatment Action	Priority	Responsible Party	Timeline
Prepare personal flood evacuation plan	Medium	Ambulance Tasmania	Prior to dwelling completion
Store valuables and chemicals above known flood level	Medium	Ambulance Tasmania	Ongoing
Ensure home insurance includes flood cover	High	Ambulance Tasmania /Insurer	Immediate – Once approval to build has been granted.
Subscribe to SES flood alert service	High	Ambulance Tasmania	Prior to dwelling completion

6. Risk Revaluation

Using the NERAG Risk Matrix considering risk management controls:

- Consequence: Moderate
- Likelihood: Unlikely
- Overall Risk Rating: Medium.

7. Monitoring and Review

Property owner should monitor flood warnings via BoM and SES Tasmania. Physical risk treatments should be reviewed after any flood event. Any renovation or extension should consult with Council planning officers regarding flood compliance.

8. Communication and Documentation

Residents should inform guests and occupants of flood procedures. A copy of this risk assessment should be stored with important documents. Maintain updated contact list for local emergency services.

Received
28.05.2025

Exhibited

FLOOD ACTION PLAN



Each year in Australia many lives are endangered and homes lost or damaged due to flooding. Flash flooding can occur in minutes while flooding from rivers and waterways can occur over days. To stay safe and protect your family and your property you need to have a household action plan and be ready to evacuate if your property is at risk of flooding.

- [ ] 

UNDERSTAND YOUR RISK - Your local council will be able to provide you with information about the level of flood risk for your property. Even though your home may not be at risk, you may still be impacted with areas often isolated due to roads being cut by floodwaters.

- [ ] 

CREATE AN EMERGENCY PLAN - You can find a guide on the Australian Red Cross website to help you make an Emergency Plan. Make sure everyone knows the plan and whether you will stay or evacuate. Decide what the trigger will be to evacuate. Check your insurance policies and make plans for pets or livestock.

- [ ] 

CHECK YOUR EMERGENCY AND EVACUATION KITS - Ensure your emergency kit is prepared and also have an evacuation kit packed for each member of the family. The evacuation kits will ensure you have what you need if you are staying at an evacuation centre or with friends or family.

- [ ] 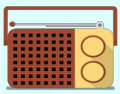

STAY INFORMED - Monitor ABC local radio, SES or Bureau of Meteorology websites for flood and storm surge advice. Check neighbours know of any warnings and are prepared.

- [ ] 

WHEN AN EVACUATION WARNING IS ISSUED - Prepare to evacuate. Staying inside a house, even one you think is high enough may be dangerous. It is safest to move to a location away from the area at risk of flooding before floodwater arrives**.** Never drive, ride or walk through floodwater.

- [ ] 

MOVE VEHICLES TO HIGHER GROUND - Move vehicles, outdoor equipment, bins, chemicals and poisons to higher ground.

- [ ] 

PREPARE YOUR PROPERTY FOR FLOOD - Use sandbags, placed correctly at possible water entry points, they can help reduce the water entry in low-level flood events. Put sandbags in the toilet bowl and over all laundry and bathroom drain holes to prevent sewage back-flow.

- [ ] 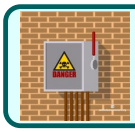

TURN OFF SERVICES - Turn off gas, electricity and water. Raise furniture, clothing and valuables onto beds, tables and into roof spaces if possible. Empty freezers and fridges and leave their doors open.

- [ ] 

PETS AND ANIMALS - If you have pets and animals, you won't be able to take them to an evacuation centre. Decide where and when you'll relocate them, ensure their tags and registrations are up to date so they can be identified. Pack extra food, water and bedding for them.

- [ ] 

EVACUATION - If you need to evacuate, follow your emergency plan. Make sure you have your evacuation kits, lock your home and take the recommended evacuation routes for your area. Don't drive in water of unknown depth or current. Advise friends and family.

Exhibited

Received
06.06.2025



Exhibited

Advanced Filtration Technology

Utilises up-flow filtration to effectively capture pollutants such as sediment, hydrocarbons, heavy metals, phosphorus, nitrogen, and total suspended solids (TSS).

Compact Design

Compact footprint with fully customizable configurations, accommodating anywhere from 1 to an unlimited number of filter cartridges, making it ideal for constrained sites with minimal installation space.

High-Efficiency Inorganic Media

AtlanFilter's inorganic filter media ensures it doesn't leach nitrogen and other nutrients. Providing high removal efficiencies, the cartridge system is designed for high flow capacity and greater surface area for stormwater treatment.

Durable Construction

AtlanFilter's design has no moving parts which increases reliability, longevity and durability.



Versatile Applications

Suitable for manholes, OSD tanks, vaults, and both trafficable and non-trafficable zones, providing adaptable stormwater solutions.

Easy Installation and Maintenance

Lightweight, no-crane installation with straightforward maintenance and easy cartridge access for pollutant removal.

Flexible Flow Rate Capability

Offers 3 LPS for full height and 1.5 LPS for half height filters, with SQIDEP-verified performance.

Sustainable Performance

Inorganic media prevents nutrient leaching, ensuring efficient and reliable treatment outcomes.

Exhibited

Tertiary stormwater filtration cartridges

Our cartridge filter system, AtlanFilter®, is a tertiary stormwater filtration system that incorporates an upflow treatment process which maximises surface treatment area. Flow through the filter cartridges utilises a self-regulating siphon which results in a low maintenance and high performance treatment of stormwater runoff. The automatic backwash at the end of each storm event further lengthens the lifespan of the stormwater treatment filter.

Hydraulic pressure forces water through the filter media — causing a constant velocity throughout the filter area realising a consistent media contact time and therefore treatment. Upon completion of a stormwater treatment cycle, the filter backwashes and effectively dislodges particulates from the filtration layers.

Applications

- Car parks & shopping centres
- Council depots
- Industrial estates
- Heavy vehicle maintenance
- Airport aprons & tarmacs
- Transport depots & loading bays
- Tunnels
- Highways & transport corridors
- Recycling yards



SQIDEP Tested Treatment Efficiencies*

POLLUTANT	EFFICIENCY
Total Suspended Solids (TSS)	85%
Total Phosphorus (TP)	74%
Total Nitrogen (TN)	59%

*Contact Atlan to confirm approved performance for the project LGA



AtlanFilter is SQIDEP approved after passing Stormwater Australia's rigorous testing and performance assessment process.

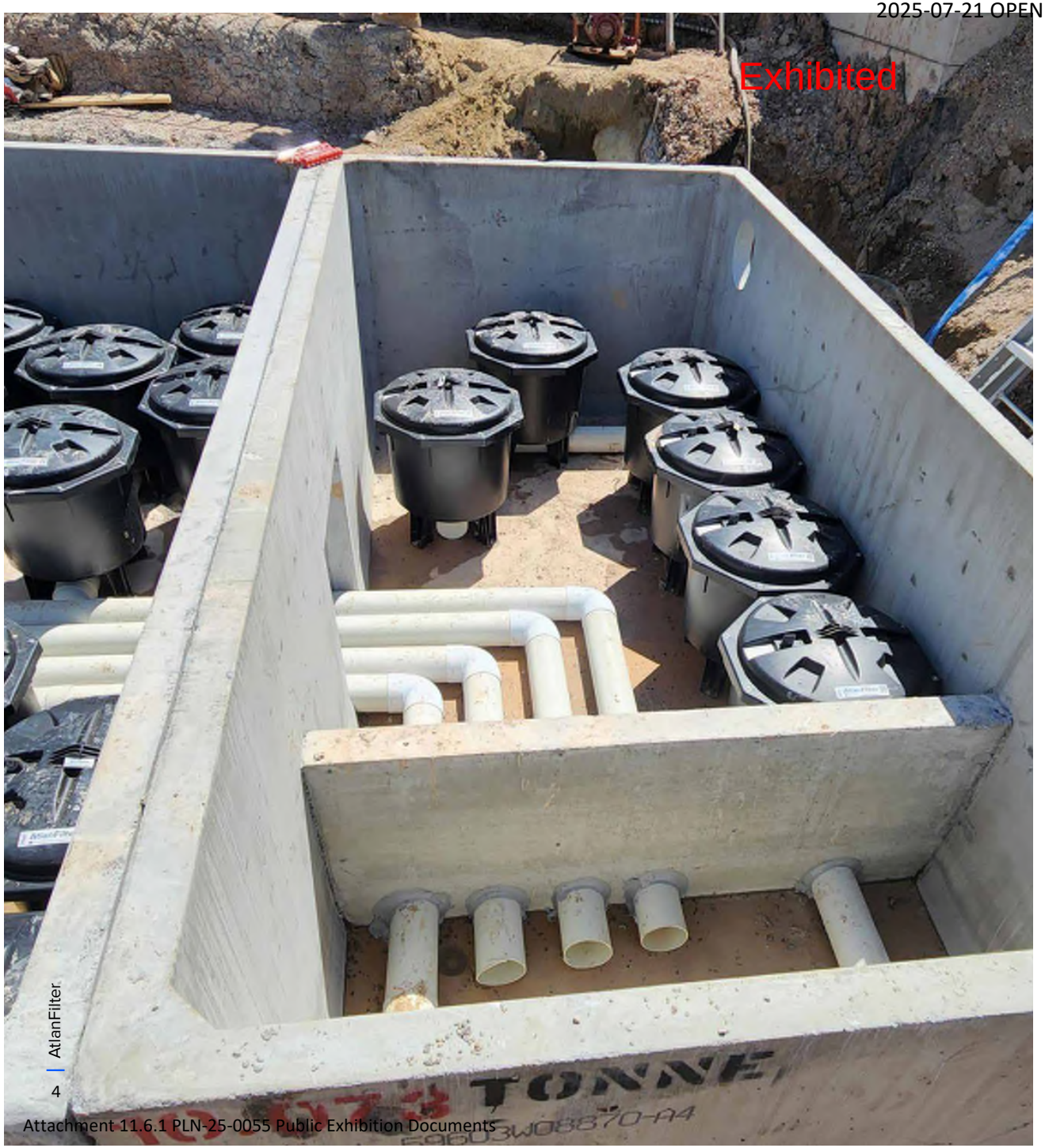

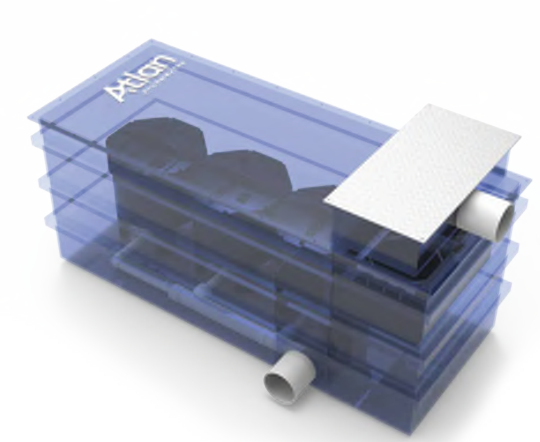

How it works

The AtlanFilter has an upflow treatment process that maximises surface area. The innovative cartridge filter system provides excellent pollutant removal in a small footprint.

Hydraulic pressure forces water through the filter media, which discharges through the centre tube and out through the outlet collection manifold.

Upon completion of a treatment cycle, each cartridge backwashes and effectively dislodges particulates from the filtration layers. This reestablishes filter media porosity. The dislodged particles accumulate on the vault floor for easy removal during maintenance.
AtlanFilter's design has no moving parts and generates a true siphon effect.

AtlanFilters are often installed downstream of nearby devices in a treatment train. For example, an Atlan GPT upstream greatly increases the life cycle interval of the AtlanFilter. These devices will remove larger gross pollutants, coarse sediments, total suspended solids and hydrocarbons - enabling the AtlanFilter to target fine particulate matter and nutrients.



Exhibited



ATLAN FILTER	FULL HEIGHT FIL-3.0	HALF HEIGHT FIL-1.5
Total height	860mm	660mm
Diameter	740mm	740mm
Minimum head required	850mm	550mm
Treatment flow rate	3.0L/s	1.5 L/s
Height of inlet ports above vault floor	250mm	250mm
Filtered water collection pipe diameter	50mm	50mm



Exhibited

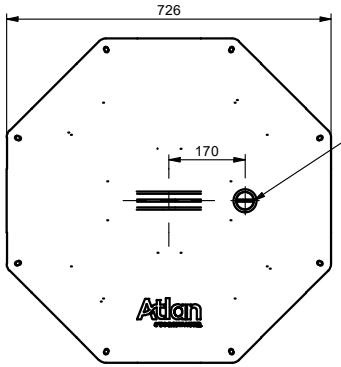

PLAN VIEW

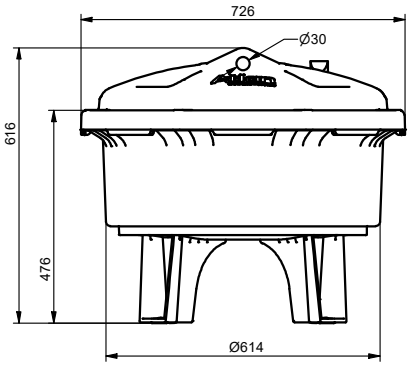

ELEVATION VIEW

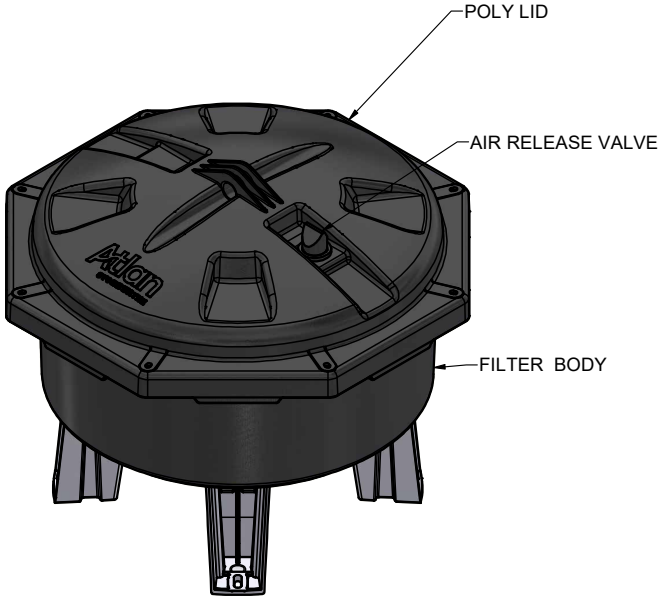

ISOMETRIC VIEW

C:\Users\jsmart\OneDrive\Documents\Vault\Designs\ATLANV01 - STANDARDS\ATLAN FILTER\FIL1.5 BNC-M\FIL-1.5.idw

TOLERANCE: All Dimensions to Closest 10 mm & +/- 30 mm

ALL INTERCONNECTING PIPEWORK, PITS AND ASSOCIATED DRAINAGE BY OTHERS

REV	DATE	BY	DESCRIPTION	CHK
1	15/04/2025	R.J.	INITIAL RELEASE	P.Z.

CLIENT:

CONFIDENTIAL - The drawings must not be disclosed to any third parties without written permission from ATLAN STORMWATER . Unauthorized disclosure may result in prosecution.
© ATLAN STORMWATER - This drawing is the property of ATLAN STORMWATER ABN: 83 151 832 629 and is subject to return on demand.It is submitted for the use only in connection with the proposal and contracts of ATLAN STORMWATER with the expressed conditions that it is not to be reproduced or copied in any form. This data must only be used in accordance with our standard terms and conditions.
© Copyright
ATLAN STORMWATER accepts no responsibility for any loss or damage resulting from any person acting on this information.
The details and dimensions contained in this document may change, please check with ATLAN STORMWATER for confirmation of current specifications.

Drawn	R.J.	Date 15/04/2025
Check	P.Z.	Date
Verified		Date
Approved		Date
Request No.		

Atlan STORMWATER

PROJECT :

TITLE
ATLANFILTER
MODEL : FIL-1.5
GENERAL ARRANGEMENT

SCALE	SIZE	SHEET	REV
N.T.S	A3	1	1

CUSTOMER CODE :

DWG No. FIL-1.5

Exhibited

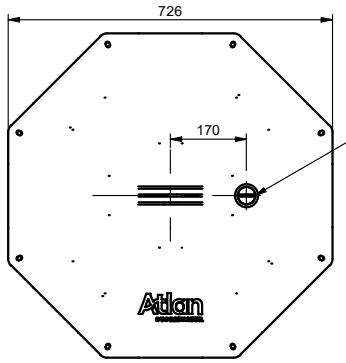

PLAN VIEW

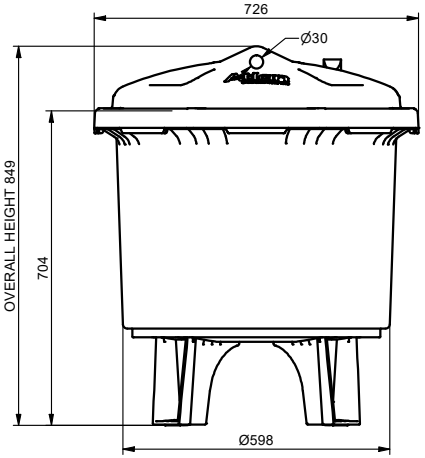

ELEVATION VIEW

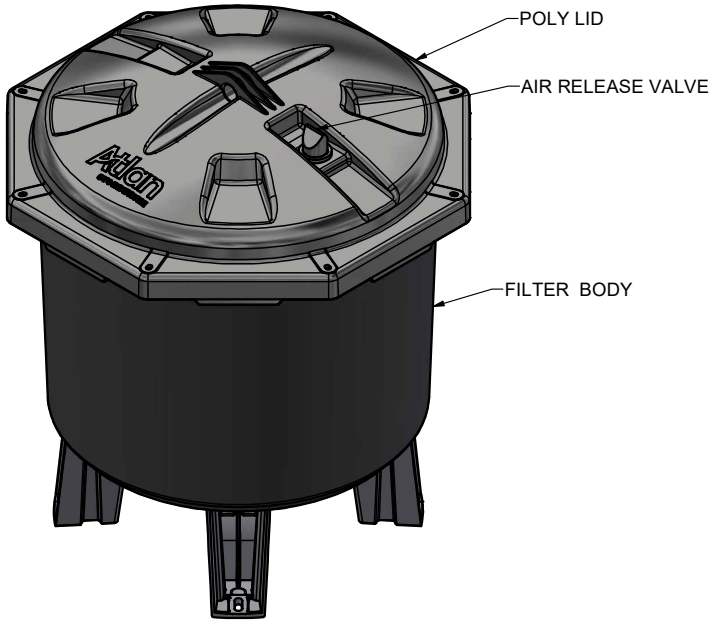

TOLERANCE: All Dimensions to Closest 10 mm & +/- 30 mm

ALL INTERCONNECTING PIPEWORK, PITS AND ASSOCIATED DRAINAGE BY OTHERS

REV	DATE	BY	DESCRIPTION	CHK
1	15/04/2025	R.J.	INITIAL RELEASE	P.Z.

CLIENT:

CONFIDENTIAL - The drawings must not be disclosed to any third parties without written permission from ATLAN STORMWATER . Unauthorized disclosure may result in prosecution.
© ATLAN STORMWATER - This drawing is the property of ATLAN STORMWATER ABN: 83 151 832 629 and is subject to return on demand.It is submitted for the use only in connection with the proposal and contracts of ATLAN STORMWATER with the expressed conditions that it is not to be reproduced or copied in any form. This data must only be used in accordance with our standard terms and conditions.
© Copyright
ATLAN STORMWATER accepts no responsibility for any loss or damage resulting from any person acting on this information. The details and dimensions contained in this document may change, please check with ATLAN STORMWATER for confirmation of current specifications.

Drawn	R.J.	Date 15/04/2025
Check	P.Z.	Date
Verified		Date
Approved		Date

Request No.

Atlan STORMWATER

PROJECT :

TITLE
ATLANFILTER
MODEL : FIL-3.0
GENERAL ARRANGEMENT

SCALE	SIZE	SHEET	REV
N.T.S	A3	1	1

CUSTOMER CODE : DWG No. FIL-3.0

C:\Users\jmart\OneDrive\Documents\Vault\Designs\ATLAN\01 - STAND\#05\ATLAN FILTER\FIL-3.0 ENG\FIL-3.0.idw

Exhibited

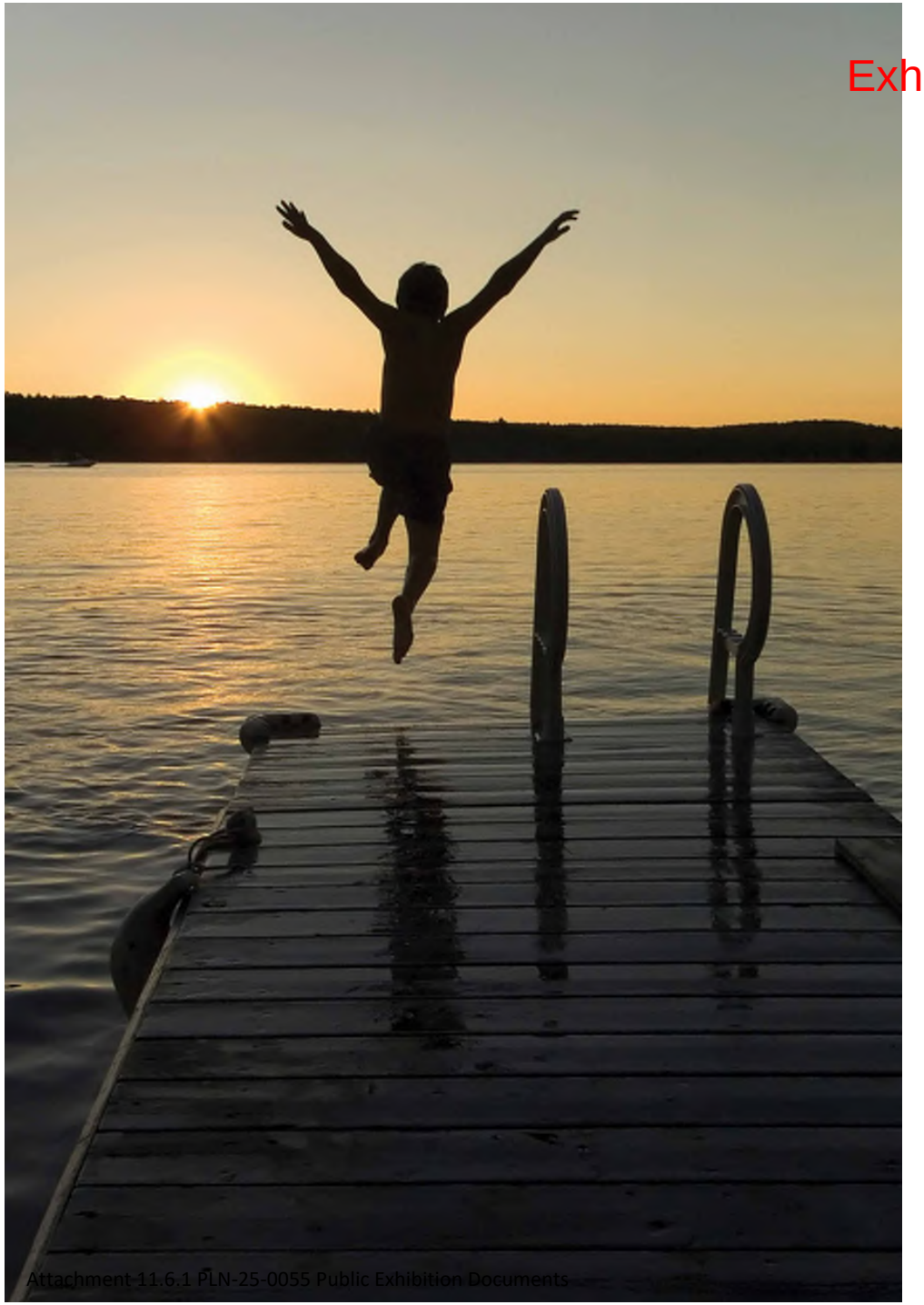

Joy in water

‘We believe clean waterways are a right, not a privilege and we work to ensure a Joy in Water experience for you, with your family & friends.’

Andy Hornbuckle, CEO

Atlan®
STORMWATER

AUSTRALIA
P 1300 773 500 | +61 2 8705 0255
sales@atlan.com.au | **atlan.com.au**

NEW ZEALAND
P 09 930 7417
sales@atlan.co.nz | **atlan.co.nz**

INTERNATIONAL
atlanstormwater.com

Received
06/05/2025

Exhibited

CONSULTING ENGINEERS

ON-SITE DETENTION REPORT

Report prepared for:

The Crown – Department of Health
New Ambulance Station

20 Union Street,

Longford, TAS, 7301

Title Reference: 203348/1
Property id: 6737245

Project 24/25 TAS 082

CONTACT

RJK CONSULTING ENGINEERS

Phone:
0400 642 462

Address:
Po Box 128
Prospect TAS 7250

Email:
mail@rjkconsultants.com.au

Received
06/05/2025

Exhibited

The following calculations have been undertaken to determine the required amount of on-site detention to control flows from the proposed development at 20 Union Street, Longford TAS.

Based on Councils policy, it states:

The policy applies to:

- All commercial, industrial and special use (e.g. community, educational, recreational) buildings or structures;
- Multiple dwellings; and where,
- The existing drainage system is unable to accommodate an increase in stormwater discharge from the site.

And based on this policy the on-site stormwater detention system must:

- *Restrict the rate of stormwater discharge to the permissible rate of discharge during the design storm event specified by Council;*
- *Provide sufficient storage to ensure peak flow rates at any point within the downstream drainage system do not increase as a result of the development during the design storm event specified by Council (up to and including the 1% AEP), unless the downstream drainage system has been designed to accommodate an increase in stormwater discharge from the site;*
- *Drain within 72 hours to ensure the storage volume is available for a subsequent storm event.*

The on-site stormwater detention system should:

- *Be integrated into the design of the development so that adequate storage areas are included in the initial stages of the site design.*

As such from the list the land in question is zones light industrial as per below:

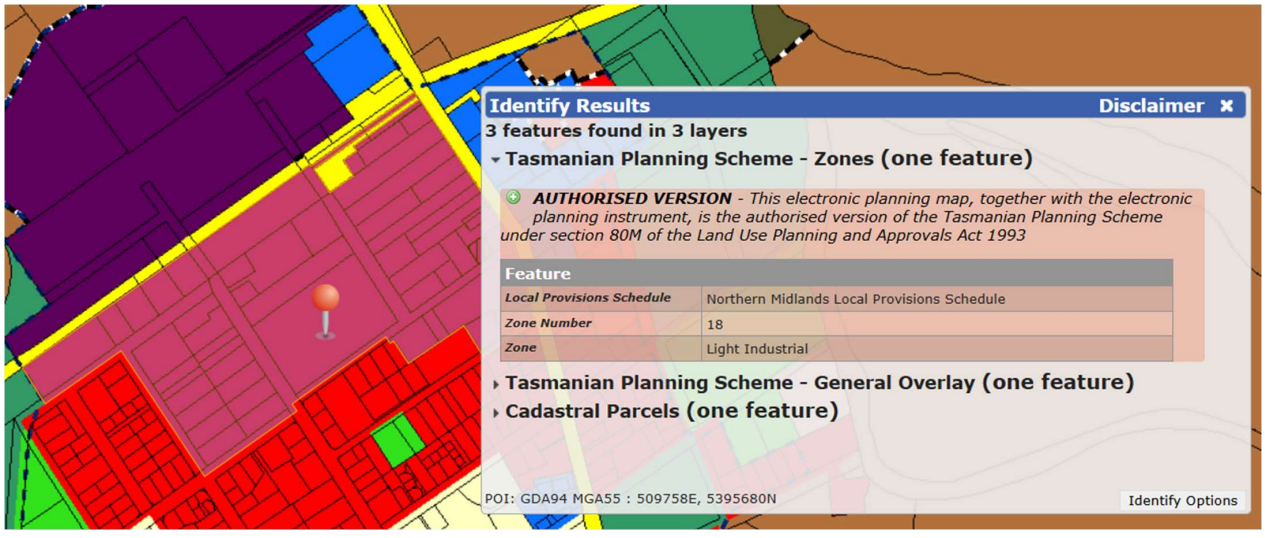

Image from the List Zones

Received
06/05/2025

Exhibited

From a development perspective, the site is restricted to the lower south west corner of the title area. As such from below the area of undeveloped site is restricted to a lot area of 2950m2.

The developed area is 1390m2.

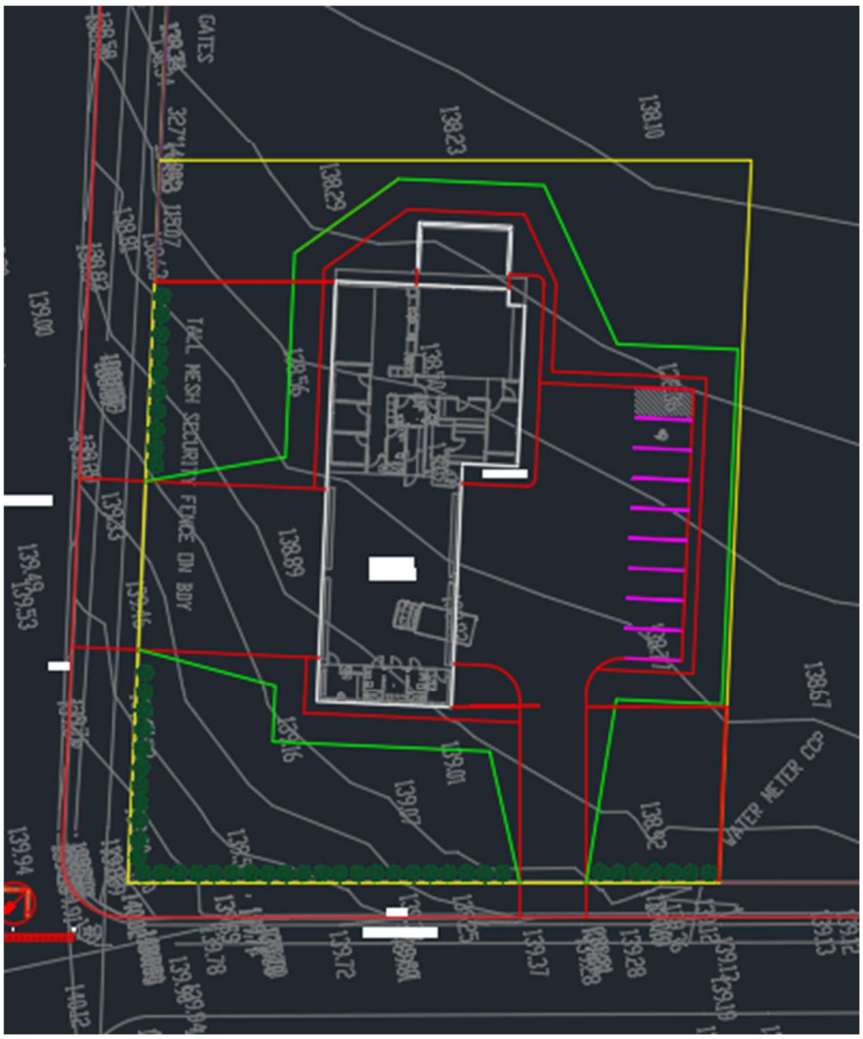

As the site requires to be raised to mitigate flood risk issues it will be sloped to the front to drain and not impose issues on adjoining areas.

Based on council's On Site Stormwater Detention Policy, the permissible discharge is 26.36l/s whilst the fraction impervious 47% (1390m^2/2950m^2) yields a storage of 6.1m^3. See overleaf.

Received
06/05/2025

Exhibited

TABLE 1: PERMISSIBLE SITE DISCHARGE (L/S) AND MINIMUM 1:20 ARI (5% AEP) DETENTION VOLUME (M3)

Lot size (m^2)	Permissible Site Discharge (PSD) (L/s)	Fraction Impervious					
		50%	60%	70%	80%	90%	100%
100	0.88	0.2	0.3	0.4	0.5	0.6	0.7
200	1.76	0.4	0.6	0.8	1.0	1.2	1.4
300	2.64	0.6	0.9	1.1	1.4	1.8	2.1
400	3.52	0.8	1.1	1.5	1.9	2.3	2.8
500	4.39	1.0	1.4	1.9	2.4	2.9	3.5
600	5.27	1.2	1.7	2.3	2.9	3.5	4.2
700	6.15	1.4	2.0	2.7	3.3	4.1	4.9
800	7.03	1.6	2.3	3.0	3.8	4.7	5.6
900	7.91	1.8	2.6	3.4	4.3	5.3	6.3
1000	8.79	2.0	2.9	3.8	4.8	5.8	7.0
1100	9.67	2.2	3.2	4.2	5.3	6.4	7.7
1200	10.55	2.4	3.4	4.5	5.7	7.0	8.4
1300	11.42	2.6	3.7	4.9	6.2	7.6	9.1
1400	12.30	2.8	4.0	5.3	6.7	8.2	9.8
1500	13.18	3.1	4.3	5.7	7.2	8.8	10.5
2000	17.58	4.1	5.7	7.6	9.6	11.7	13.9
2500	21.97	5.1	7.2	9.5	11.9	14.6	17.4
3000	26.36	6.1	8.6	11.4	14.3	17.5	20.9
3500	30.76	7.1	10.0	13.2	16.7	20.4	24.4
4000	35.15	8.1	11.5	15.1	19.1	23.4	27.9
4500	39.55	9.1	12.9	17.0	21.5	26.3	31.3
5000	43.94	10.2	14.3	18.9	23.9	29.2	34.8
5500	48.33	11.2	15.7	20.8	26.3	32.1	38.3
6000	52.73	12.2	17.2	22.7	28.7	35.0	41.8

OSD Sizing

Based on the OSD requirement recommended by council of storage 6.1m^3, the assessment has been made to have this storage volume contained within a pipe system.

Based on Volume and using Hudson OSD tanks, it is recommended that series of three 2000L tanks and one 1000l OSD tanks be utilised for storage. Refer appendix for Hudson document.

Orifice Plate Sizing

In order to size the orifice plate, Council have advised that the limiting outflow is to be 26.36l/s (0.02636m^3/s). Based on this and using the formula, where:

$Q=CA(2gh)^{0.5}$

C = 0.6

A = total orifice area (m^2) = 0.01

g = acceleration due to gravity (m^2/s) = 9.81

H = depth of water above the centroid of orifice plate hole (m) = 920m

The area of the orifice is equal to area of 0.01m^2 or a diameter of 112mm.

Received
06/05/2025

Exhibited

Conclusion

As demonstrated, to meet Council's requirement for OSD, 3 of 2000l Hudson tanks and 1 x 1000l Hudson tank will be utilised with an orifice plate diameter of 112mm. These have been shown on the attached plan.



Risden Knightley BE (Civil)

Ass Dip Civil Eng, FIEAust, CC 2539X

Received
06/05/2025

HUDSON ENVIRONMENTAL

Exhibited

Detention tanks – single units

Precast concrete detention units offer fast, cost effective installation combined with the strength and durability benefits of precast concrete. Available in 1,000 and 2,000 Litre capacities, they are simply installed online quickly with a minimum of fuss. If a larger storage is required then multiple tanks can be close-coupled to create purpose built storage systems.

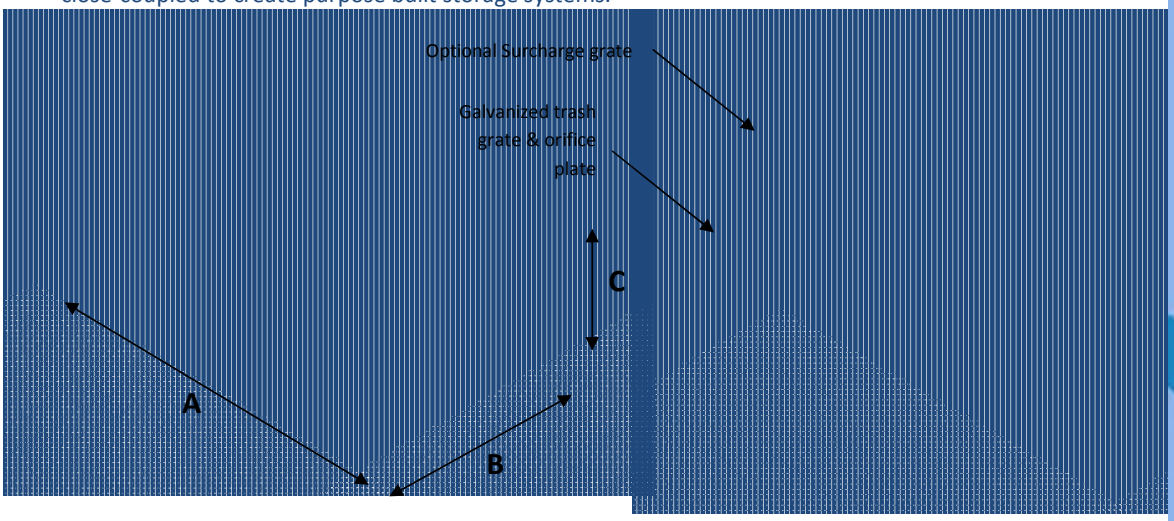

CODE	CAPACITY	A	B	C
ST650	1000	2100	1200	600
ST670	2000	2512	1412	920

Design considerations should take into account some basic information to help choose the model that is best suited to your requirements:

Depth to invert of the outlet from ground level is greater than 550mm?	**YES**	A 2,000 litre tank is suitable for installation
	NO	Due to depth restrictions, 1,000 litre tanks may be necessary to ensure tanks are situated below ground.
Are you permitted to divert excess water to Councils storm water system after the design capacity has been reached?	**YES**	A "Top hat" restrictor may be installed to allow a bypass of high flows into the councils mains
	NO	An "Orifice Plate" must be fitted over the outlet, constantly restricting the flow.
If installing an Orifice Plate, do you wish the excess flood water to be discharged directly above the storage Unit?	**YES**	A surcharge grate will be installed in the lid of the unit. This grate is able to be adjusted on site by your plumber when landscaping has been completed.
	NO	Your Plumber will need to ensure that the excess storm water is allowed to overflow from your system in a safe location until floodwaters subside.
Has your design stipulated the size of the orifice (hole) on the outlet of the structure?	**YES**	We will supply and fit either the Top hat or Orifice Plate with this size opening
	NO	You will need to obtain this information for us to complete the tank prior to delivery.

Hobart
10 Gepp Parade, Derwent Park, 7009
T (03)62730463 **F** (03)62733438
E hobart@hudsoncivil.com.au

HUDSON CIVIL PRODUCTS

Launceston
7 Donald's Avenue, Prospect Tas 7250
T (03)63358200 **F** (03)63401881
E sales@hudsoncivil.com.au

Received
06/05/2025

HUDSON ENVIRONMENTAL

Exhibited

Detention tank options

On site stormwater detention helps relieve pressure on Councils existing and new infrastructure by helping to slow or minimise flows during rain events by detaining or retaining the stormwater collected during such events. Hudson Civil Products has many options to assist designers and builders install the most cost effective option for any given site. Precast concrete units offer many benefits including:

- Fast installation with delivery and installation using a crane truck.
- No assembling, liners or membranes
- No specific requirements on back fill materials
- May be used in trafficked areas
- Manufactured from durable high strength reinforced concrete
- The ability to couple together units for large storage requirements

In fact, with the large range of products manufactured by Hudson Civil Products, we could not possibly detail them all here. Our staff will assess any site to determine the most cost effective option, however, below are the most common off the shelf systems.

The 2,000 litre tank (1,000 Litre also available) system is ideal for small unit developments or large houses and is best used as a detention tank to slow flows from the property. A typical system involves the connection of the 100mm or 150mm stormwater pipe at the invert of the tank. The outlet is generally fitted with an orifice plate with an opening of around 50-75mm diameter. This orifice plates allows high flows to bypass the restrictor and exit the pit to alleviate flooding if the 2,000 litre capacity is reached. Alternatively, a surcharge grate can be fitted to allow this surcharge to remain on the property until flows subside.

The 4,000 litre circular tank system is best suited to areas where the reuse of stormwater is required. It is becoming more important that our precious rainwater is used to help alleviate the pressures on our lakes and rivers. A Hudson Civil circular tank will provide enough water to run the toilets and also provide water for the garden. A complete design can be provided to ensure the correct pump size is chosen to ensure a seamless change from mains water to recycled stormwater in your house. These systems can be retrofitted to most houses with little trouble.

Modular storage systems are also available from Hudson Civil and may be constructed in varying sizes to meet your project specific requirements. The plastic modules are capable of taking traffic loads and may be constructed to provide a sealed unit suitable for water reuse applications.

Reinforced Concrete Box Culverts (RCBC) are the traditional and most widely used system for detaining stormwater flows. RCBC units come in many sizes and it is this flexibility and their ability to be designed for any situation that sees them used extensively. A RCBC system however can be costly for small volumes and will generally require some engineering designs adding additional costs to projects.

Hobart
10 Gepp Parade, Derwent Park, 7009
T (03)62730463 **F** (03)62733438
E hobart@hudsoncivil.com.au

HUDSON CIVIL PRODUCTS

Launceston
7 Donald's Avenue, Prospect Tas 7250
T (03)63358200 **F** (03)63401881
E sales@hudsoncivil.com.au

Exhibited

AMBULANCE TASMANIA
PROPOSED AMBULANCE STATION
20 UNION STREET, LONGFORD
MAR 2025

Received
13.06.2025



LOCALITY PLAN
N.T.S.

DRAWING INDEX		
SHEET No.	DESCRIPTION	REVISION
G01	CIVIL SERVICES - COVER SHEET AND LOCALITY PLAN	C
G02	CIVIL SERVICES - NOTES	C
C01	CIVIL SERVICES - GENERAL DETAILS SHEET 1	C
C02	CIVIL SERVICES - GENERAL DETAILS SHEET 2	C
C03	CIVIL SERVICES - SITE LOCATION & SERVICES PLAN	C
C04	CIVIL SERVICES - GENERAL ARRANGEMENT & FSL PLAN	C
C05	CIVIL SERVICES - SERVICES PLAN	C
C06	CIVIL SERVICES - PAVEMENT PLAN	C
C07	CIVIL SERVICES - DRIVEWAY PROFILE SECTIONS	C
C08	HYDRAULIC SERVICES - STATION WATER RETICULATION	C
C09	CIVIL SERVICES - STORMWATER PROFILES\ SHEET 1	C
C10	CIVIL SERVICES - STORMWATER PROFILES SHEET 2	C
C11	CIVIL SERVICES - SEWER PROFILES SHEET 1	C

Risden Knightley - 991537
Registered Professional Engineer
BE Civil FIEAust CPEng NPR
13/06/**2025**
Tasmanian Accreditation No. CC2539X

DRAWING LEGEND

EXISTING		PROPOSED	
	DRAINAGE MAIN		DRAINAGE MAIN
	DRAINAGE CONNECTION		DRAINAGE CONNECTION
	SEWER MAIN		SEWER MAIN
	SEWER CONNECTION		SEWER CONNECTION
	WATER MAIN		WATER MAIN
	WATER CONNECTION		WATER CONNECTION
	DRAINAGE MANHOLE	MH1	DRAINAGE MANHOLE
S	SEWER MANHOLE		SEWER MANHOLE
SV	STOP VALVE		STOP VALVE
FH	FIRE PLUG		FIRE PLUG
WM	WATER METER		WATER METER

Rev.	Amendment	Date
C	INCLUSION OF WSUD DETAILS AS PER REPORT	12.06.2025
B	ISSUED IN RESPONSE TO RFI. ISSUED FOR TENDER	22.05.2025
A	ISSUED FOR TENDER	05/05/2025

rjk Consulting Engineers

Designed: RJK
Drawn: ASW
Endorsed: RJK
Accreditation: CC2539X

Client: AMBULANCE TASMANIA
Project: 20 UNION STREET, LONGFORD PROPOSED STATION

Drawing title: CIVIL SERVICES COVER SHEET AND LOCALITY PLAN
Scale: NTS
Original size: A3

Date: 21.03.2025
Status: TENDER ISSUE

Drawing No: 24/25TAS082
Sheet: G01
Revision: C

Exhibited

GENERAL:

WORK HEALTH & SAFETY NOTICE:
RJK HAVE CONSIDERED THE HAZARDS AND RISKS ASSOCIATED WITH THE CONSTRUCTION, OPERATION, MAINTENANCE AND EVENTUAL DEMOLITION OF THIS PROJECT. THERE ARE A NUMBER OF HAZARDS AND HENCE RISKS WHICH ARE NOT UNIQUE TO THIS PROJECT WHICH NEED TO BE MANAGED DURING THESE PHASES. RJK REMIND CONSTRUCTORS, OPERATORS, MAINTAINERS AND DEMOLISHERS OF THEIR RESPONSIBILITIES UNDER WORK HEALTH & SAFETY ACTS AND REGULATIONS. THE FOLLOWING RISKS HAVE BEEN IDENTIFIED WHICH ARE UNUSUAL TO THIS PROJECT: NIL

UNLESS SPECIFIED OTHERWISE BY DOCUMENTATION SPECIFIC TO THIS PROJECT ALL DIMENSIONS, MATERIALS, WORKMANSHIP ETC SHALL COMPLY WITH DSG STANDARD CONTRACT DOCUMENTS AND SPECIFICATIONS (R SERIES) AND IPWEA SUBDIVISION STANDARD DRAWINGS ISSUED DECEMBER 2020.

ONLY THOSE SERVICES CONSPICUOUS DURING FIELD SURVEYS HAVE BEEN PLOTTED. THE LOCATION OF THESE SERVICES IS APPROXIMATE ONLY AND NO GUARANTEE IS GIVEN THAT ALL SERVICES ARE SHOWN. THE CONTRACTOR SHALL CONFIRM ON SITE PRIOR TO THE START OF WORKS THE LOCATION OF ALL SERVICES WITH THE RELEVANT AUTHORITY.

CONTRACTOR SHALL POTHOLE ALL EXISTING SERVICES, WHERE REQUIRED, PRIOR TO THE COMMENCEMENT OF WORKS WHICH MAY BE AFFECTED BY THE LINE AND LEVEL OF THE EXISTING SERVICE. WHERE A CONFLICT WITH AN EXISTING SERVICE IS IDENTIFIED THE CONTRACTOR SHALL SEEK DIRECTION FROM THE SUPERINTENDENT. NO CLAIM FOR VARIATION OR EXTENSION OF TIME WILL BE CONSIDERED AS A RESULT OF THE CONTRACTORS FAILURE TO UNDERTAKE THIS INVESTIGATION, AT A SUFFICIENT TIME PRIOR TO THE INSTALLATION WORKS, TO ALLOW ANY REDESIGN TO OCCUR.

PRIOR TO THE COMMENCEMENT OF SITE WORKS THE CONTRACTOR SHALL PREPARE. SUBMIT AND GAIN APPROVAL FROM THE RELEVANT COUNCIL FOR A SOIL AND WATER MANAGEMENT PLAN FOR THE CONSTRUCTION WORKS. THE CONTRACTOR SHALL BE RESPONSIBLE FOR THE INSTALLATION AND MAINTENANCE OF ALL REQUIRED PROTECTION MEASURES FOR THE DURATION OF THE CONTRACT AND UNTIL NEW VEGETATION IS FULLY ESTABLISHED.

PRIOR TO THE COMMENCEMENT OF ANY COUNCIL INFRASTRUCTURE WORKS. THE CONTRACTOR SHALL APPLY TO COUNCIL, AND RECEIVE A PERMIT TO CONSTRUCT PUBLIC INFRASTRUCTURE.

FOR WORKS WITHIN THE ROAD RESERVATION THE CONTRACTOR SHALL APPLY FOR AND RECEIVE A ROAD OPENING PERMIT FROM COUNCIL PRIOR TO THE COMMENCEMENT OF WORKS, THIS APPLICATION SHALL INCLUDE THE PREPARATION OF TRAFFIC AND PEDESTRIAN MANAGEMENT PLANS AS APPLICABLE.

THE CONTRACTOR SHALL BE RESPONSIBLE FOR THE INSTALLATION AND MAINTENANCE OF ALL PEDESTRIAN AND TRAFFIC MANAGEMENT DEVICES TO COMPLY WITH AS1742 FOR THE DURATION OF THE WORKS.

WHERE REQUIRED BY COUNCIL THE CONTRACTOR SHALL PREPARE IN ELECTRONIC (.DWG) FORMAT "AS CONSTRUCTED" DRAWINGS TO THE SATISFACTION OF COUNCIL MUNICIPAL ENGINEER SHOWING THE AS INSTALLED LOCATION OF ALL ABOVE AND BELOW GROUND WORKS. CONFIRMATION OF APPROVAL, FROM THE RELEVANT AUTHORITY, OF THE THE COMPLETED DRAWINGS SHALL BE SUBMITTED TO THE SUPERINTENDENT PRIOR TO THE ISSUING OF THE CERTIFICATE OF PRACTICAL COMPLETION.

ALL PIPEWORK (WATER, SEWER AND STORMWATER) PROFILE LEVELS ARE TO THE PIPE INVERT LEVEL. ALLOW ADDITIONAL TRENCHING DEPTH FOR BEDDING AS INDICATED ON THE TYPICAL DETAILS.

THE CONTRACTOR IS RESPONSIBLE FOR COMPLYING WITH ALL CONDITIONS OF THE PLANNING PERMIT, A COPY OF WHICH MUST BE KEPT ON SITE.

PROPRIETARY PRODUCTS ARE TO BE INSTALLED IN ACCORDANCE WITH THE MANUFACTURER'S WRITTEN INSTRUCTIONS.

Received
13.06.2025

EARTHWORKS:

DEMOLISH AND REMOVE ALL CONCRETE SLABS, KERBS, WALLS, FOOTINGS ETC. AS NOTED AND REQUIRED FOR THE CONSTRUCTION OF THE NOMINATED WORKS.

CONTRACTOR TO STRIP MINIMUM 300mm SOIL ACROSS THE SITE. BUILD UP PAVEMENT SUBGRADE WITH SUB-BASE 2.

FOLLOWING DEMOLITION AND REMOVAL OF SLABS, KERBS ETC. AND STRIPPING OF THE SITE TO THE REQUIRED FORMATION LEVELS, GRADE SUB-GRADE TO A SMOOTH PROFILE AND CONSOLIDATE TO 98% MAXIMUM DRY DENSITY(AS 1289.5) PROOF ROLL IN THE PRESENCE OF THE SUPERINTENDENT USING A SINGLE AXLE RIGID TRUCK WITH A FULL LEGAL LIMIT LOAD, REMOVE ANY UNSUITABLE SOFT, WET OR HEAVING MATERIAL AS DIRECTED BY THE SUPERINTENDENT AND REPLACE WITH COMPACTED SELECT FILL IN LAYERS NOT EXCEEDING 200mm LOOSE TO ACHIEVE 98% STANDARD COMPACTION (AS1289.5).

STRIPPED TOPSOIL SHALL BE STOCKPILED ON-SITE FOR RESPREADING ON BATTERS AND DISTURBED AREAS, ALL EXCESS TOPSOIL TO BE RETAINED ON-SITE UNLESS APPROVED OTHERWISE BY THE SUPERINTENDENT.

ALL EXCESS EXCAVATED MATERIAL SHALL BECOME THE PROPERTY OF THE CONTRACTOR AND SHALL BE DISPOSED OF OFF SITE UNLESS APPROVED OTHERWISE BY THE SUPERINTENDENT.

ANY IMPORTED FILL MATERIAL FOR UNDER ROADWAYS AND CARPARKS SHALL BE WELL GRADED AND HAVE A MINIMUM CBR VALUE OF 15% AND SHALL BE COMPACTED TO A MINIMUM OF 95% STANDARD COMPACTION TO AS1289 IN LAYERS NOT EXCEEDING 200mm LOOSE THICKNESS.

ALL EARTHWORKS INCLUDING EMBANKMENTS SHALL BE PREPARED AND CONSTRUCTED TO DSG SPECIFICATION R22 & R23

WHERE EMBANKMENT FILLS EXCEED 400mm IN HEIGHT ABOVE STRIPPED SURFACE LEVEL THE CONTRACTOR SHALL PROVIDE COMPACTION TEST RESULTS FOR THE PLACED MATERIAL AT A RATE OF AT LEAST 1 PER 500M2 OR A MINIMUM OF 2 PER LAYER WHICHEVER IS THE GREATER UNLESS APPROVED OTHERWISE BY THE SUPERINTENDENT.

DURING FORMATION WORKS THE CONTRACTOR SHALL ENSURE THAT ADEQUATE STEPS ARE TAKEN TO PROTECT THE SUBGRADE FROM WET WEATHER PRIOR TO THE PLACEMENT OF THE SUB-BASE. NO CLAIM WILL BE CONSIDERED AS A RESULT OF THE CONTRACTORS FAILURE TO PROTECT THE WORKS.

ROADWORKS:

WHERE NEW WORKS ABUT EXISTING SAWCUT ALL INTERFACES TO NEAT STRAIGHT LINES AND RECTANGULAR SHAPES AND MAKE GOOD TO MATCH.

BACKFILL ALL TRENCHES AND EXCAVATIONS WITHIN VEHICLE PAVEMENTS FULL DEPTH WITH 20mm FINE CRUSHED ROCK CONSOLIDATED IN MAXIMUM 150 LAYERS TO 96% MODIFIED COMPACTION.

SUBMIT TO THE CONSULTING ENGINEER PRIOR TO THEIR USE MATERIAL PROPERTIES AND SOURCE FOR ALL ROAD MAKING MATERIALS. UNLESS NOTED OTHERWISE PAVEMENT MATERIALS SHALL COMPLY WITH THE REQUIREMENTS OF DSG SPECIFICATION R40 FOR BASE CLASS A AND SUB-BASE 1 MATERIALS.

EACH COMPLETED PAVEMENT LAYER SHALL BE COMPACTED TO A MINIMUM DDR OF 96% FOR SUB-BASE AND 98% FOR BASE COURSE AND PROOF ROLLED IN THE PRESENCE OF THE SUPERINTENDENT USING A SINGLE AXLE RIGID TRUCK WITH A FULL LEGAL LIMIT LOAD.

CONSTRUCT PAVEMENT BETWEEN NOMINATED LEVELS TO SMOOTH GRADES AND TRANSITION TO DRAIN TO PITS, KERB AND GUTTER, V-DRAINS ETC.

HOTMIX AND PAVED SURFACES SHALL HAVE A BITUMEN EMULSION PRIME COAT APPLIED TO THE CLEAN SWEPT SURFACE OF THE BASE COURSE.

CARPARK SPACES ARE TO BE DELINEATED BY PAINTED LINES. 80mm WIDE WITH TWO COATS OF ROAD MARKING PAINT TO DSG SPECIFICATION R64. CLEARLY MARK 'DISABLED' SPACES BY PAINTED SYMBOL TO AUSTRALIAN STANDARD.

CONCRETE COMPRESSIVE STRENGTH SHALL BE:
PAVEMENTS AND GRATED TRENCH - N25
PITS, & MINOR WORKS - N25.
WORKMANSHIP, MATERIALS AND DESIGN SHALL BE IN ACCORDANCE WITH AS3600 AND THE ASSOCIATED CODES LISTED THEREIN AND THE SPECIFICATION.

GRADE AND ROLL MINIMUM 100 TOPSOIL TO ALL GRASSED AREAS AND PLANTERS. WHERE NECESSARY TO RAISE LEVELS. PLACE AND CONSOLIDATE GENERAL FILL FROM SITE BENEATH TOPSOIL.

PRECAST CONCRETE WHEELSTOPS TO BE HUMES OR EQUIVALENT 2000 LONG WITH 2No. 16dia GALV. SPIKES 300 LONG.

CONCRETE PAVEMENTS GENERAL:

FOOTPATHS, KERB RAMPS AND DRIVEWAYS TO BE CONSTRUCTED IN ACCORDANCE WITH IPWEA MUNICIPAL STANDARD DRAWINGS TSD-R11-v3, TSD-R18-v3 AND TSD-R09-v3 (UNO).

CONSTRUCT PAVEMENT BETWEEN NOMINATED LEVELS TO SMOOTH GRADES AND TRANSITION TO PITS, KERBS, V-DRAINS, EDGES etc. THE MINIMUM GRADIENT OF ANY AREA ON THE PAVEMENT IS TO BE 1:100. WHERE DISCREPANCIES EXIST ON THE DRAWINGS REFER TO SUPERINTENDENT FOR DIRECTION.

THE FINISHED SURFACE LEVEL OF ANY PAVEMENT ADJACENT TO BUILDINGS SHALL BE BELOW THE WALL DAMP PROOF COURSE AND SHALL NOT OBSCURE WEEP HOLES OR DRAINAGE OPENINGS. THE PAVEMENT SHALL GRADE AWAY FROM THE BUILDING.

INSTALL 2No. N16 x 2100 LONG TRIMMER BARS AT 45Deg ACROSS ALL RE-ENTRANT CORNERS.
INSTALL CONTROL AND EXPANSION JOINTS AS SHOWN ON THE DRAWINGS.
INSTALL ISOLATION JOINTS AT ALL INTERFACES WITH EXISTING OR PROPOSED STRUCTURES.

ALL JOINT SEALANTS SHALL BE INSTALLED IN ACCORDANCE WITH THE MANUFACTURER'S WRITTEN SPECIFICATIONS.

TOLERANCES OF FINISHED SURFACES
MAXIMUM DEVIATION UNDER A 3m STRAIGHT EDGE = +/-10mm
MAXIMUM LEVEL DIFFERENCE FROM DESIGN LEVELS = +/-20mm
CONCRETE THICKNESS AND REINFORCEMENT LOCATION TO AS3600

CURE SURFACE FOR MINIMUM 7 DAYS AFTER PLACEMENT, CONTRACTOR TO SUBMIT TO THE SUPERINTENDENT FOR APPROVAL THE PROPOSED METHOD OF CURING PRIOR TO THE COMMENCEMENT OF PAVEMENT WORKS. PROTECT SURFACE FROM VEHICULAR TRAFFIC DURING CURING PERIOD.

STORMWATER RETICULATION - MUNICIPAL

ALL WORKS ARE TO BE IN ACCORDANCE WITH IPWEA STANDARD DRAWINGS NOVEMBER 2013,

PROVIDE MINIMUM 2m LONG GEOFABRIC WRAPPED SUBSOIL DRAIN STARTER ON THE UPSTREAM SIDE OF ALL STORMWATER MANHOLES AND PITS. SUBSOIL DRAIN TO BE CONSTRUCTED SUCH THAT IT WILL DRAIN THE BASE OF THE BEDDING GRAVEL. INSTALL MASS CONCRETE BULKHEADS TO PERIMETER OF MANHOLE TO PREVENT BYPASS OF WATER AROUND MANHOLE.

FOR PIPE BEDDING AND BACKFILL REFER WSAA STD DRG. SEW-1201. PIPE EMBEDMENT TO BE 7mm CLEAN AGGREGATE (UNO). BACKFILL ALL TRENCHES WITHIN VEHICLE PAVEMENTS TO THE UNDERSIDE OF THE PAVEMENT LAYER FULL DEPTH WITH 20mm FINE CRUSHED ROCK CONSOLIDATED IN MAXIMUM 150MM LAYERS TO 96% MODIFIED COMPACTION.

ENSURE COVERS TO ALL PITS AND MANHOLES ARE INSTALLED FLUSH WITH FINISHED SURFACE LEVEL. MANHOLES OUTSIDE OF SEALED AREAS ON GRADES EXCEEDING 14% SHALL BE INSTALLED HORIZONTALLY WITH A 1m SAFE LEVEL WORKING AREA SURROUNDING. PIT COVERS SHALL BE OF A TYPE APPROVED BY COUNCIL AND EITHER CLASS D WHERE LOCATED WITHIN ROADWAY PAVEMENTS OR CLASS B IN OTHER LOCATIONS.

ALL STORMWATER PIPES TO BE:
<300mm DIAMETER UPVC MINIMUM CLASS SN8 SCJ
>=300mm DIAMETER STORMPRO or BLACKMAX (PP) MINIMUM CLASS SN8 RRJ

PROPERTY CONNECTION TO BE DN150 SN8 UPVC SW TO IPWEA STD. DRG. TSD-SW27-v3 (UNO)

WHERE MANAGED BY THE THE CONTRACTOR, THE CONTRACTOR SHALL ENSURE THE AS-CONSTRUCTED DRAWINGS, SURVEY & CONTROL AND DATA COLLECTION IS UNDERTAKEN AND PROVIDED TO COUNCIL IN ACCORDANCE COUNCIL REQUIREMENTS.

PRIVATE SERVICES - PLUMBING

ALL PLUMBING WILL BE IN ACCORDANCE WITH THE TASMANIAN PLUMBING REGULATIONS, AS3500, NATIONAL CONSTRUCTION CODE (AND ALL REFERENCED STANDARDS AND GUIDEBOOKS) AND TO THE LOCAL AUTHORITY APPROVAL

PIPEWORK LAYOUTS ARE DIAGRAMMATIC ONLY. CO-ORDINATE ALL SERVICES PRIOR TO INSTALLATION

DN100 SEWER TO BE UPVC SCJ CLASS SN8
DN150 AND DN225 STORMWATER TO BE UPVC SCJ CLASS SN8
FOLLOWING COMPLETION OF THE WORKS, FLUSH ALL PIPING SYSTEMS AND LEAVE FREE OF FOREIGN MATTER.

PLUMBING WORKS AS DEFINED BY THE DIRECTOR OF BUILDING CONTROL ARE TO BE UNDERTAKEN BY A LICENSED AND ACCREDITED PLUMBING PRACTITIONER. THE ACCREDITED PLUMBING PRACTITIONER IS TO LIAISE WITH THE LOCAL AUTHORITY AND ARRANGE A START WORK NOTICE, ALL MANDATORY INSPECTIONS, TESTING AND, PRACTICAL & FINAL COMPLETION CERTIFICATES

SURVEY CONTROL

DATE OF JANUARY 2025

WHILE REASONABLE EFFORT HAS BEEN MADE TO LOCATE ALL VISIBLE ABOVE GROUND SERVICES, THERE MAY BE OTHER SERVICES THAT WERE NOT LOCATED DURING THIS SURVEY

PAVING

ALL WORKS TO BE IN ACCORDANCE WITH CMAA CONCRETE FLAG PAVEMENTS - DESIGN AND CONSTRUCTION GUIDE AND CMAA TECHNICAL NOTE T46 - CONCRETE SEGMENTAL PAVEMENTS DETAILING GUIDE (www.cmaa.com.au).
BEDDING SAND SHALL COMPLY WITH THE FOLLOWING GRADING:

SIEVE SIZE	%PASSING
4.75mm	90 - 100
2.36mm	80 - 100
1.18mm	50 - 85
600 microns	25 - 60
300 microns	10 - 30
150 microns	5 - 15
75 microns	0 - 10

JOINTING SAND SHALL BE DRY AND COMPLY WITH THE FOLLOWING GRADING:

SIEVE SIZE	%PASSING
2.36mm	100
1.18mm	90 - 100
600 microns	60 - 90
300 microns	30 - 60
150 microns	15 - 30
75 microns	5 - 10

JOINT SAND SHALL BE REPEATEDLY SWEPT INTO PAVER JOINTS UNTIL JOINTS ARE THOROUGHLY FILLED.

BESSER UNIPAVE TO BE LAID IN ACCORDANCE WITH THE CEMENT AND CONCRETE ASSOCIATION OF AUSTRALIA'S TECHNICAL NOTE 56 - GUIDE SPECIFICATION FOR INTERLOCKING ROAD PAVEMENTS 60mm THICK TYPE A - HERRINGBONE PATTERN ON SAND BEDDING ON CONSOLIDATED BASE AS DETAILED.

BRICK PAVING SAND TO COMPLY WITH MATERIALS SPECIFICATION IN THE CLAY AND BRICK PAVER INSTITUTE "PAVER NOTE ONE, SPECIFYING AND LAYING CLAY PAVERS."

SAND NOMINATED AS SAND CEMENT SHALL CONTAIN 10% CEMENT AND SHALL BE PLACED TOTALLY DRY TO DRY PAVERS ETC.

BRICK PAVERS SHALL BE 65 THICK CLAY BRICK WITH A MINIMUM CHARACTERISTIC COMPRESSIVE STRENGTH OF N45.

MAKE UP FROM EXCAVATED SURFACE TO PAVEMENT SUBGRADE IN APPROVED BACKFILL MATERIAL CONSOLIDATED IN MAXIMUM 150 LAYERS TO 96% MAXIMUM DRY DENSITY.

HOLD POINTS

THE FOLLOWING HOLD POINTS SHALL BE WITNESSED BY THE SUPERINTENDENT FOR APPROVAL PRIOR TO THE CONTINUATION OF CONSTRUCTION:
- STRIPPED SURFACE PRIOR TO PLACEMENT OF FILL
- EMBANKMENT SUBGRADE PRIOR TO PLACEMENT OF SUB BASE
- TOP OF BASE A PRIOR TO SEALING / CONCRETING
- SERVICES CONNECTIONS TO COUNCIL AND TASWATER INFRASTRUCTURE

PERIMETER SURFACE LEVELS

LEVELS SHALL COMPLY WITH THE REQUIREMENTS OF THE NCC AND PERMIT AUTHORITIES REQUIREMENTS.

THE MINIMUM HEIGHT OF A BUILDING SLAB ABOVE FINISHED GROUND LEVEL SHALL BE 150mm. EXCEPT IN SANDY. WELL DRAINED AREAS WHERE THE MINIMUM HEIGHT SHALL BE 100MM. THESE HEIGHTS CAN BE REDUCED LOCALLY TO 50MM WHERE THERE IS AN ADJOINING PAVED AREA THAT SLOPES AWAY FROM THE BUILDING AT A MINIMUM 2.5% FOR A MINIMUM 1.0M. THESE RESTRICTIONS DO NOT APPLY TO BELOW GROUND SLABS WHICH ARE PROTECTED BY FULLY WATER-PROTECTED AND DRAINED RETAINED WALLS

Risden Knightley - 991537
Registered Professional Engineer
BE Civil FIEAust CPEng NPR
13/06/**202**5
Tasmanian Accreditation No. CC2539X

Rev.	Amendment	Date
C	INCLUSION OF WSUD DETAILS AS PER REPORT	12.06.2025
B	ISSUED IN RESPONSE TO RFI. ISSUED FOR TENDER	22.05.2025
A	ISSUED FOR TENDER	05/05/2025

rjk Consulting Engineers

Designed: RJK
Drawn: ASW
Endorsed: RJK
Accreditation: CC2539X

Client: AMBULANCE TASMANIA
Project: 20 UNION STREET, LONGFORD
PROPOSED STATION

Drawing title: CIVIL SERVICES NOTES
Scale: NTS
Original size: A3

Date: 21.03.2025
Status: TENDER ISSUE

Drawing No: 24/25TAS082
Sheet: G02
Revision: C

Received
13.06.2025

Exhibited

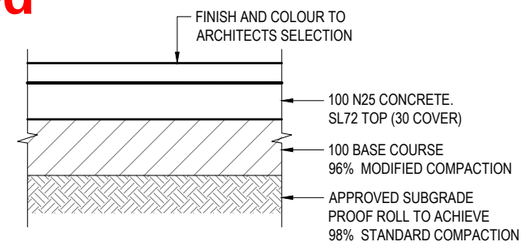

NOTE: PROVIDE CONTROL JOINTS (CJ) AT MAX. 4m CENTRES

LIGHT DUTY CONCRETE DETAIL
SCALE 1:10

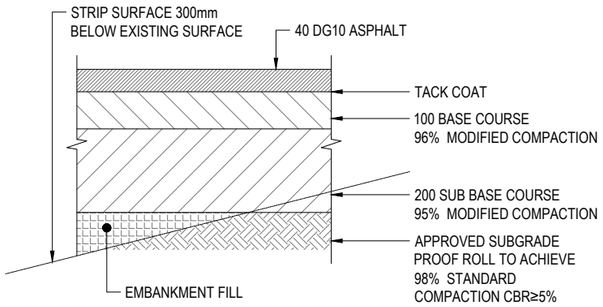

HEAVY DUTY ASPHALT DETAIL
SCALE 1:10

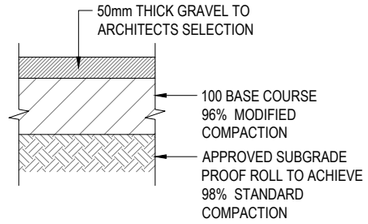

SYNTHETIC GRASS DETAILS
SCALE 1:10

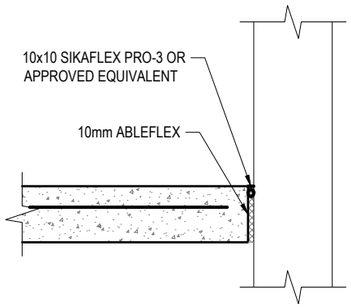

ISOLATION JOINT (IJ)
SCALE 1:10
NOTE: INSTALL IJ ADJACENT ALL CONCRETE/BUILDING INTERFACES

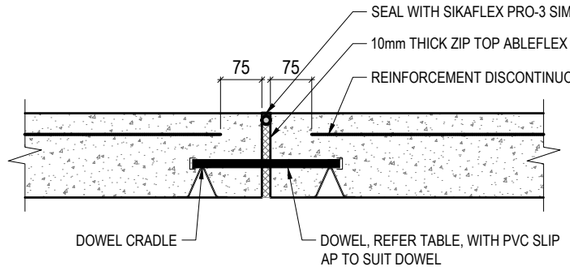

EXPANSION JOINT (EJ)
SCALE 1:10
INSTALL AT 18mm MAX CENTRES

DOWEL TABLE

SLAB THICKNESS (mm)	DOWEL DIAMETER (mm)	DOWEL LENGTH (mm)	DOWEL SPACING
100	12	450	300
150	20	450	300

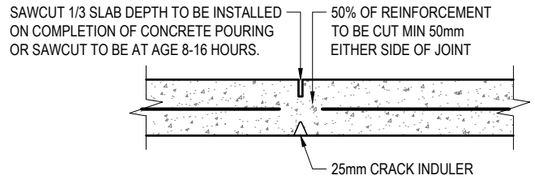

CONTROL JOINT (CJ)
SCALE 1:10
INSTALL @6m MAX CENTRES

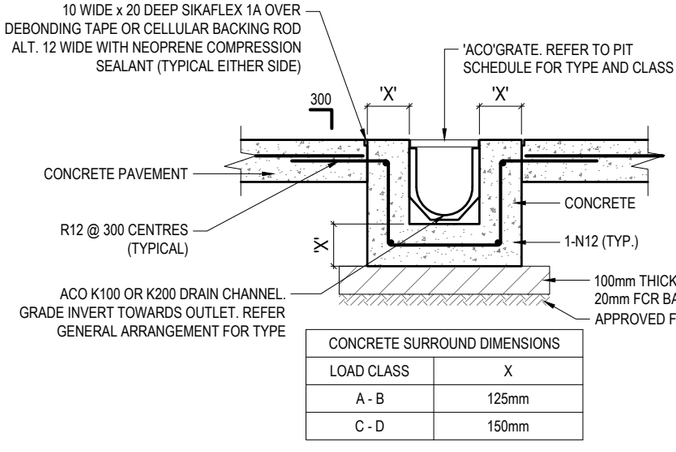

CONCRETE SURROUND DIMENSIONS	
LOAD CLASS	X
A - B	125mm
C - D	150mm

GRATED TRENCH DRAIN CONCRETE PAVEMENT
SCALE 1:20

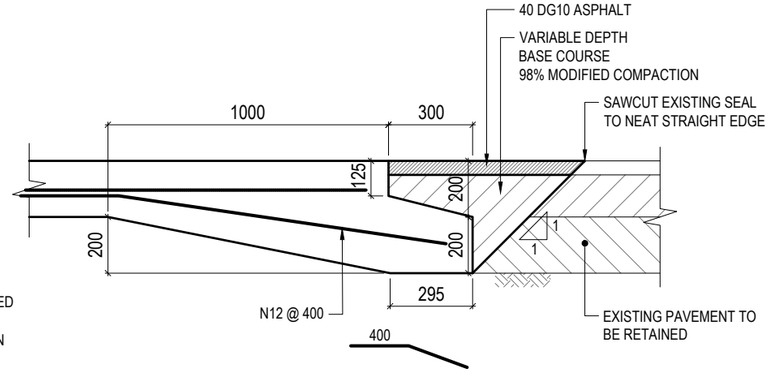

CONCRETE PAVEMENT TO HOTMIX DETAIL
SCALE 1:20

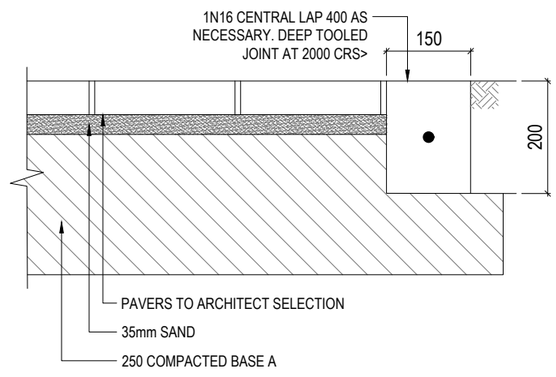

PAVEMENT DETAIL
SCALE 1:10

Risden Knightley - 991537
Registered Professional Engineer
BE Civil FIEAust CPEng NPR
13/06/2025
Tasmanian Accreditation No. CC2539X

Rev.	Amendment	Date
C	INCLUSION OF WSUD DETAILS AS PER REPORT	12.06.2025
B	ISSUED IN RESPONSE TO RFI. ISSUED FOR TENDER	22.05.2025
A	ISSUED FOR TENDER	05/05/2025

rjk Consulting Engineers

Designed: RJK
Drawn: ASW
Endorsed: RJK
Accreditation: CC2539X

Client: AMBULANCE TASMANIA
Project: 20 UNION STREET, LONGFORD PROPOSED STATION

Drawing title: CIVIL SERVICES GENERAL DETAILS SHEET 1
Scale: AS SHOWN
Original size: A3

Date: 21.03.2025
Status: TENDER ISSUE

Drawing No: 24/25TAS082
Sheet: C01
Revision: C

Received
13.06.2025

Exhibited

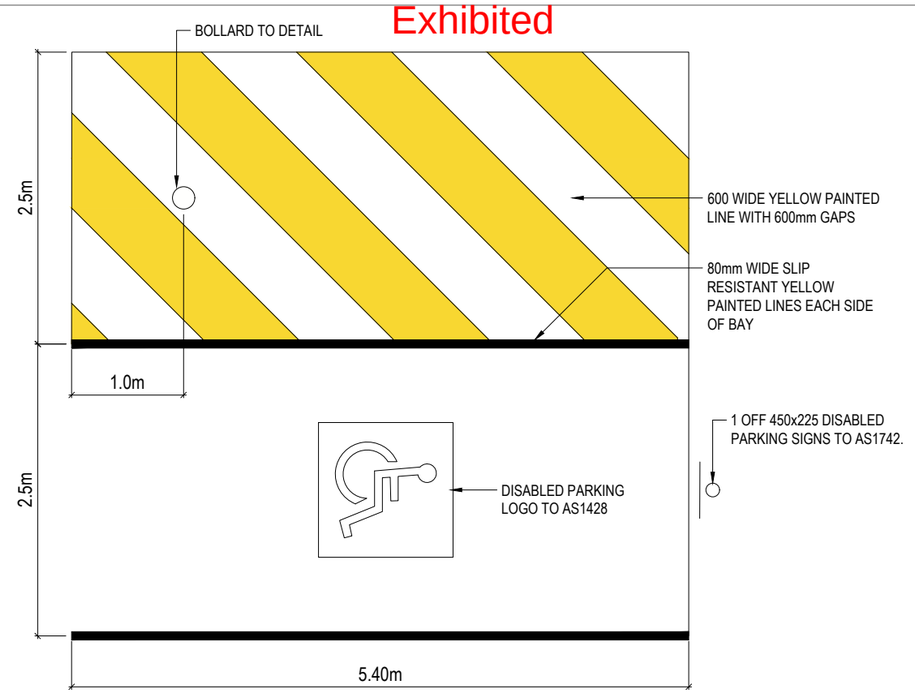

DDA PARKING SPACES
SCALE 1:10

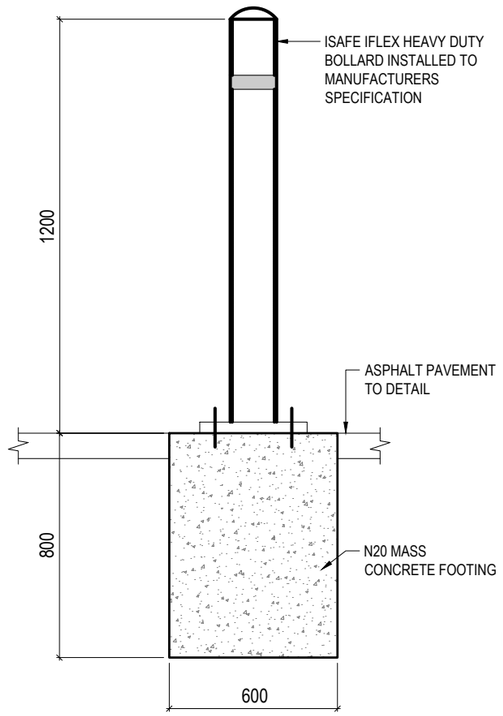

BOLLARD DETAIL
SCALE 1:20
NOTE: CONFIRM LOCATION ON SITE WITH SUPERINTENDENT PRIOR TO INSTALLATION OF BOLLARDS.

Risden Knightley - 991537
Registered Professional Engineer
BE Civil FIEAust CPEng NPR
13/06/2025
Tasmanian Accreditation No. CC2539X

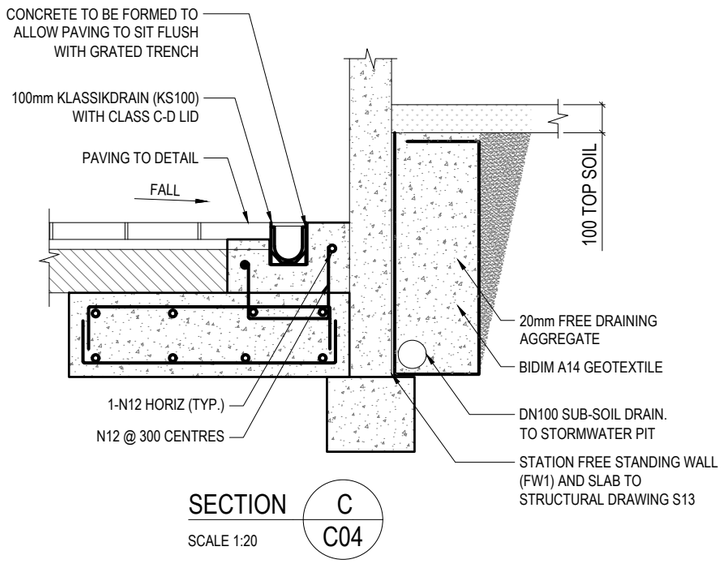

SECTION C
C04
SCALE 1:20

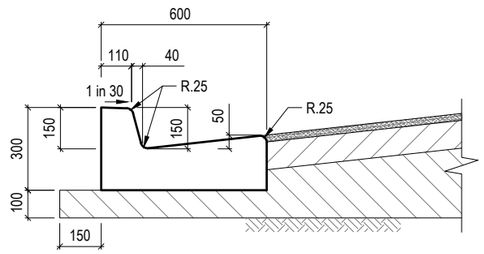

KERB AND CHANNEL (KC)
SCALE 1:20

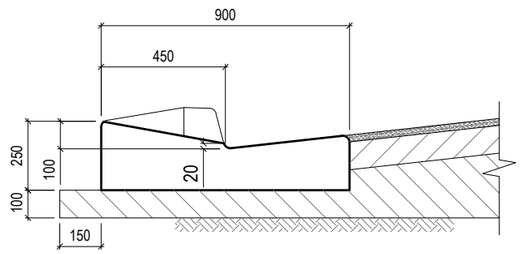

VEHICLE CROSSING (KC)
SCALE 1:20

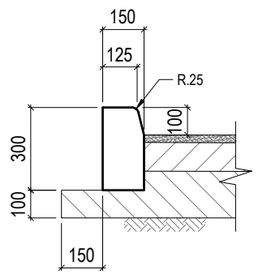

BARRIER KERB (BK)
SCALE 1:20

Rev.	Amendment	Date
C	INCLUSION OF WSUD DETAILS AS PER REPORT	12.06.2025
B	ISSUED IN RESPONSE TO RFI. ISSUED FOR TENDER	22.05.2025
A	ISSUED FOR TENDER	05/05/2025

rjk Consulting Engineers

Designed: RJK
Drawn: ASW
Endorsed: RJK
Accreditation: CC2539X

Client: AMBULANCE TASMANIA
Project: 20 UNION STREET, LONGFORD
PROPOSED STATION

Drawing title: CIVIL SERVICES
GENERAL DETAILS SHEET 2

Scale: AS SHOWN
Original size: A3

Date: 21.03.2025
Status: TENDER ISSUE

Drawing No: 24/25TAS082
Sheet: C02
Revision: C

Exhibited

NOTES:

A. NEW DN 100 mm PROPERTY SEWER CONNECTION CONNECTION TO BE ISOLATED 300 mm INSIDE FRONT PROPERTY BOUNDARY & 300 mm FROM SIDE PROPERTY BOUNDARY. WORK BY 'TASWATER' AT APPLICANTS COST.

B. NEW DN 25 mm (ID 20mm) PROPERTY WATER CONNECTION & WATER METER. METER LOCATION TO BE 500 mm INSIDE FRONT PROPERTY BOUNDARY & 200 mm FROM SIDE PROPERTY BOUNDARY. WORK BY 'TASWATER' AT APPLICANTS COST.

C. ALL WATER METER CONNECTIONS FROM MAIN LINE SERVICE TO PROPERTY ENTRY SHALL BE INSTALLED AND PROVIDED BY "TASWATER" AT THE DEVELOPERS/OWNERS EXPENSE. ANY EXTRA CONNECTIONS TO REAR RESIDENCE SHALL BE PROVIDED BY "TASWATER" AT DEVELOPERS/OWNERS EXPENSE.

D. REFER DRAWING G02 FOR CIVIL NOTES ASSOCIATED WITH THE PROJECT.

E. CONTOURS SHOWN ARE SURVEY SURFACE CONTOURS. CONTOURI INTERVAL = 0.2m

F. SERVICES PLANS ONLY. THESE DRAWINGS ARE TO BE USED IN CONJUNCTION WITH APPROVED ARCHITECTURAL DRAWINGS.

G. CLEARANCES BETWEEN SERVICE LINES SHALL ADHERE TO WSA 02- 2014-3.1 TABLE 5.4 & WSA 03-2011-3.1 TABLE 5.5



SITE LOCATION & SERVICES PLAN
SCALE 1:1000

Received
13.06.2025

Risden Knightley - 991537
Registered Professional Engineer
BE Civil FIEAust CPEng NPR
13/06/2025
Tasmanian Accreditation No. CC2539X

Rev.	Amendment	Date
C	INCLUSION OF WSUD DETAILS AS PER REPORT	12.06.2025
B	ISSUED IN RESPONSE TO RFI. ISSUED FOR TENDER	22.05.2025
A	ISSUED FOR TENDER	05/05/2025

rjk Consulting Engineers

Designed: RJK
Drawn: ASW
Endorsed: RJK
Accreditation: CC2539X

Client: AMBULANCE TASMANIA
Project: 20 UNION STREET, LONGFORD
PROPOSED STATION

Drawing title: CIVIL SERVICES
SITE LOCATION & SERVICES PLAN
Scale: 1:1000 Original size: A3

Date: 21.03.2025 Status: TENDER ISSUE

Drawing No: 24/25TAS082 Sheet: C03 Revision: C

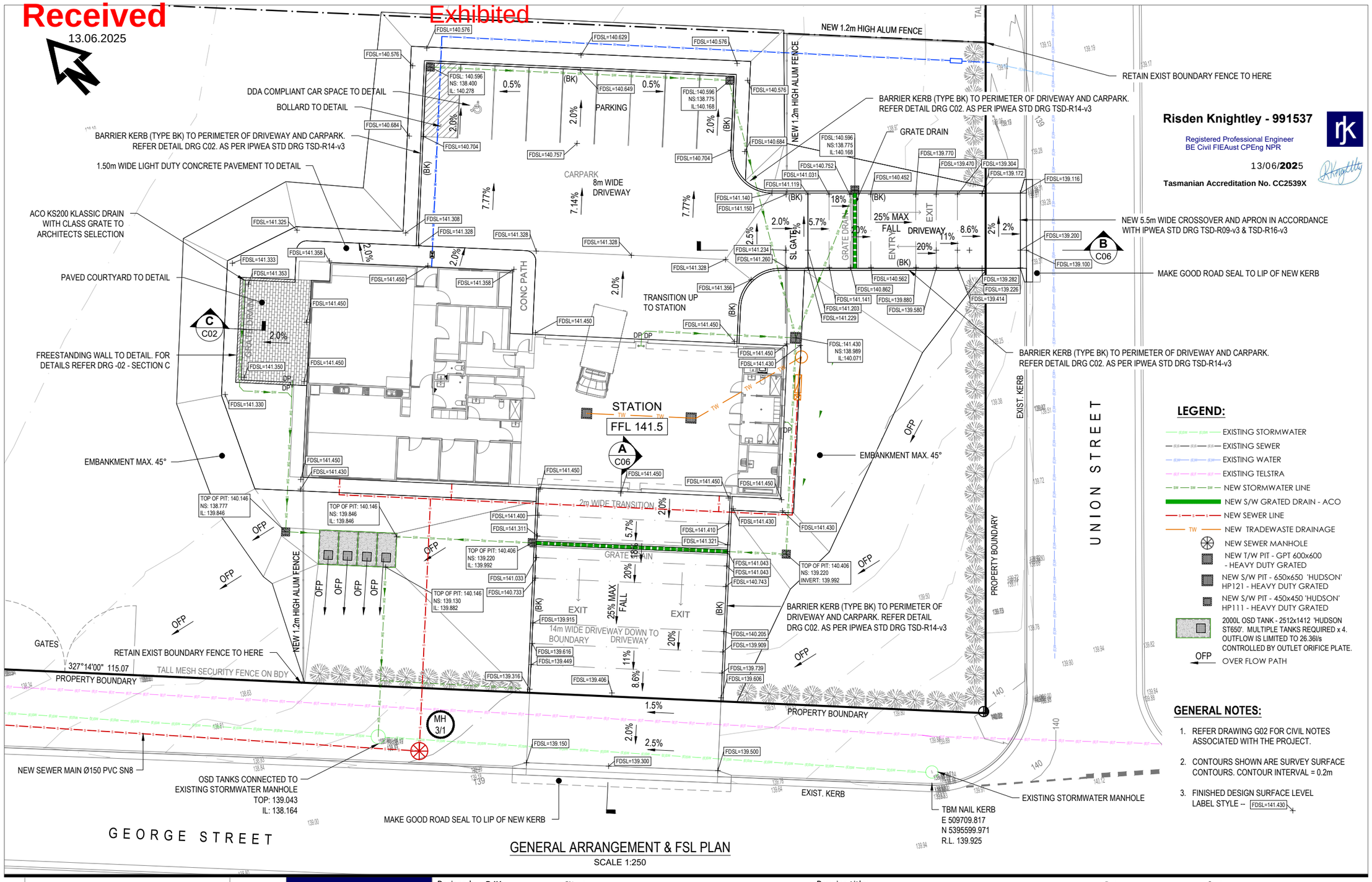

GENERAL ARRANGEMENT & FSL PLAN
SCALE 1:250

Rev.	Amendment	Date
C	INCLUSION OF WSUD DETAILS AS PER REPORT	12.06.2025
B	ISSUED IN RESPONSE TO RFI. ISSUED FOR TENDER	22.05.2025
A	ISSUED FOR TENDER	05/05/2025

rjk Consulting Engineers

Designed: RJK
Drawn: ASW
Endorsed: RJK
Accreditation: CC2539X

Client: AMBULANCE TASMANIA
Project: 20 UNION STREET, LONGFORD PROPOSED STATION

Drawing title: CIVIL SERVICES GENERAL ARRANGEMENT & FSL PLAN
Scale: 1:250
Original size: A3

Date: 21.03.2025
Status: TENDER ISSUE
Drawing No: 24/25TAS082
Sheet: C04
Revision: C

Received
13.06.2025

Exhibited

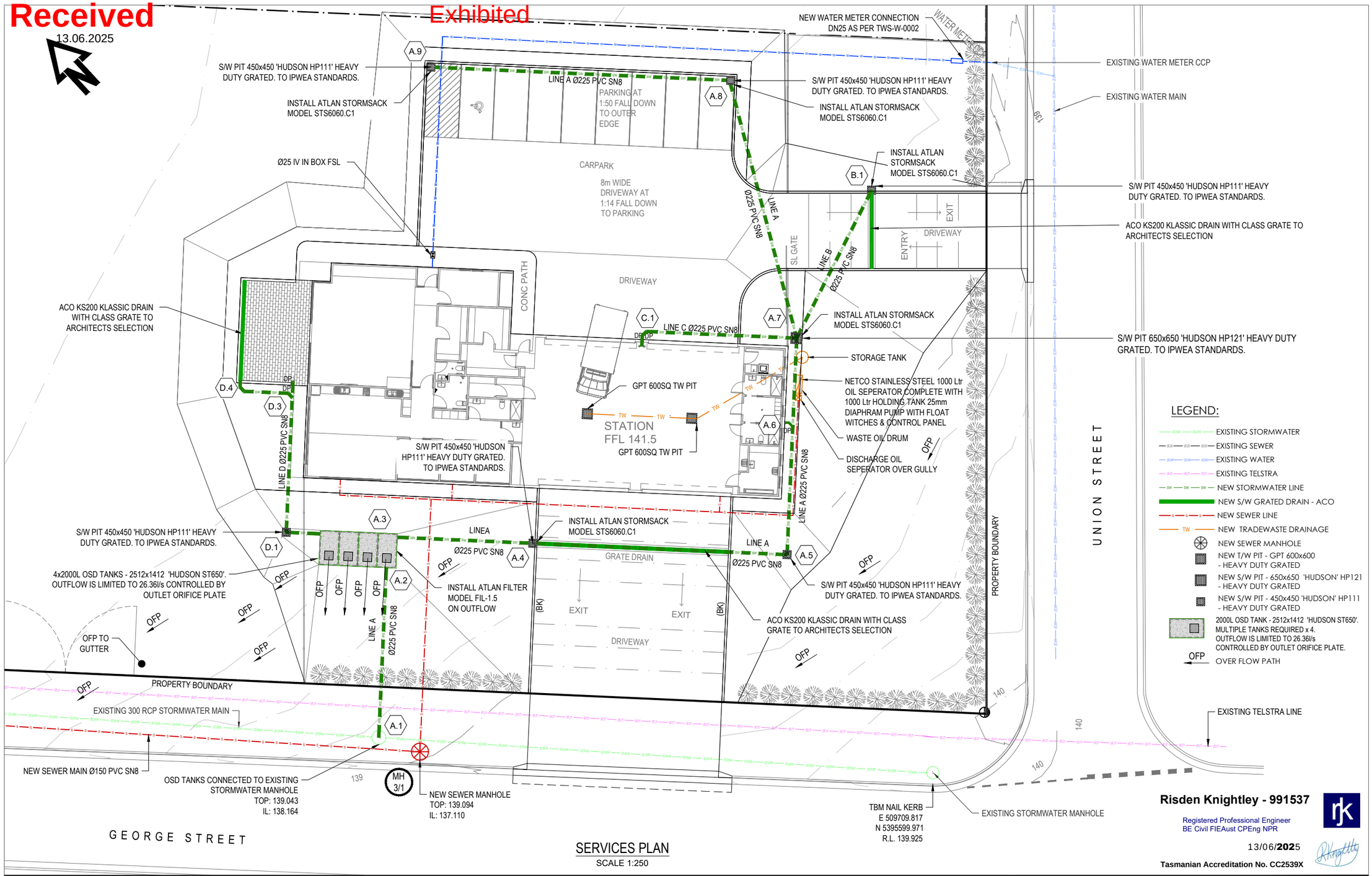

SERVICES PLAN
SCALE 1:250

Risden Knightley - 991537
Registered Professional Engineer
BE Civil FIEAust CPEng NPR
13/06/2025
Tasmanian Accreditation No. CC2539X

Rev.	Amendment	Date
C	INCLUSION OF WSUD DETAILS AS PER REPORT	12.06.2025
B	ISSUED IN RESPONSE TO RFI. ISSUED FOR TENDER	22.05.2025
A	ISSUED FOR TENDER	05/05/2025

rjk Consulting Engineers

Designed: RJK
Drawn: ASW
Endorsed: RJK
Accreditation: CC2539X

Client: AMBULANCE TASMANIA
Project: 20 UNION STREET, LONGFORD PROPOSED STATION

Drawing title: CIVIL SERVICES SERVICES PLAN
Scale: 1:250 Original size: A3

Date: 21.03.2025 Status: TENDER ISSUE
Drawing No: 24/25TAS082 Sheet: C05 Revision: C

Exhibited

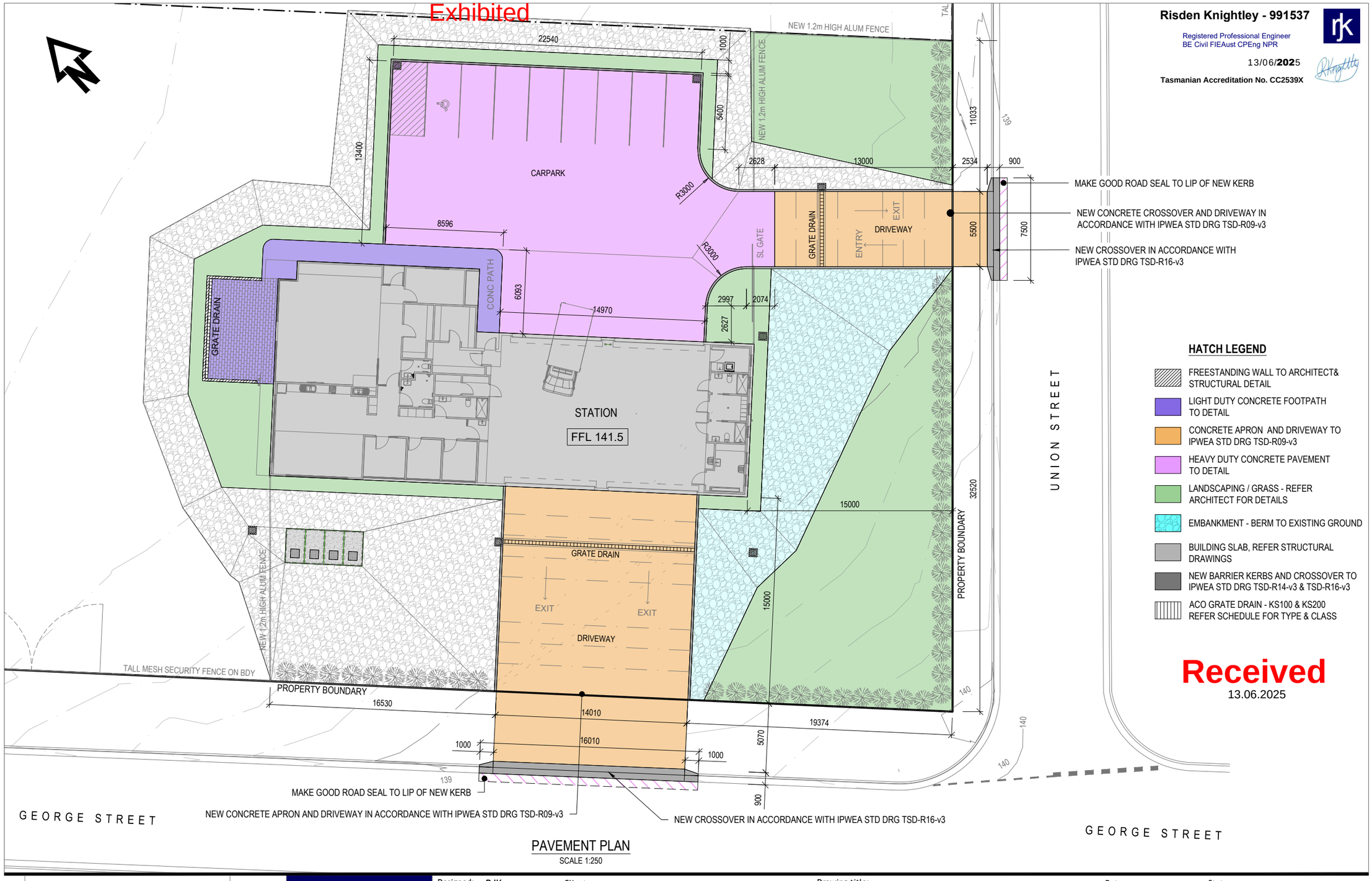

PAVEMENT PLAN
SCALE 1:250

Risden Knightley - 991537
Registered Professional Engineer
BE Civil FIEAust CPEng NPR
13/06/2025
Tasmanian Accreditation No. CC2539X

HATCH LEGEND

- FREESTANDING WALL TO ARCHITECT& STRUCTURAL DETAIL
- LIGHT DUTY CONCRETE FOOTPATH TO DETAIL
- CONCRETE APRON AND DRIVEWAY TO IPWEA STD DRG TSD-R09-v3
- HEAVY DUTY CONCRETE PAVEMENT TO DETAIL
- LANDSCAPING / GRASS - REFER ARCHITECT FOR DETAILS
- EMBANKMENT - BERM TO EXISTING GROUND
- BUILDING SLAB, REFER STRUCTURAL DRAWINGS
- NEW BARRIER KERBS AND CROSSOVER TO IPWEA STD DRG TSD-R14-v3 & TSD-R16-v3
- ACO GRATE DRAIN - KS100 & KS200 REFER SCHEDULE FOR TYPE & CLASS

Received
13.06.2025

Rev.	Amendment	Date
C	INCLUSION OF WSUD DETAILS AS PER REPORT	12.06.2025
B	ISSUED IN RESPONSE TO RFI. ISSUED FOR TENDER	22.05.2025
A	ISSUED FOR TENDER	05/05/2025

rjk Consulting Engineers

Designed: RJK
Drawn: ASW
Endorsed: RJK
Accreditation: CC2539X

Client: AMBULANCE TASMANIA
Project: 20 UNION STREET, LONGFORD
PROPOSED STATION

Drawing title: CIVIL SERVICES
PAVEMENT PLAN

Scale: 1:250
Original size: A3

Date: 21.03.2025
Status: TENDER ISSUE

Drawing No: 24/25TAS082
Sheet: C06
Revision: C

Received
13.06.2025

Exhibited

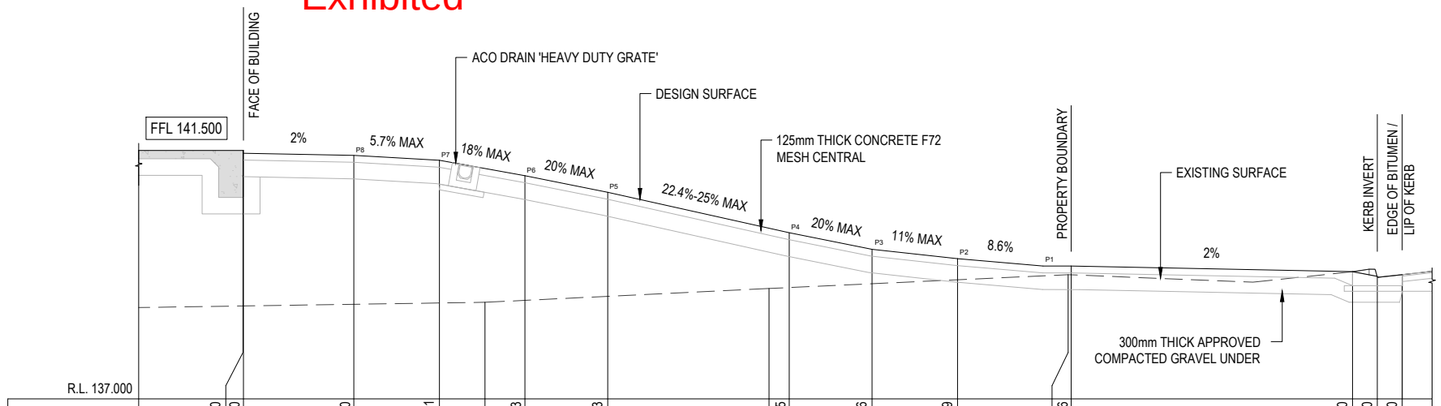

FINISHED DESIGN SURFACE LEVEL	141.500	141.450	141.410	141.321		141.043	140.743		140.005	139.706	139.539		139.406		139.300	139.200	139.250
EXISTING SURFACE		138.684			138.750			139.000				139.250					139.250
OFFSET	-15.000	-15.000	-13.000	-11.450	-10.625	-9.900	-8.400	-5.477	-5.110	-3.560	-2.010	-0.055	0.000		5.098	5.548	5.998

SECTION A
SCALE 1:100
C04

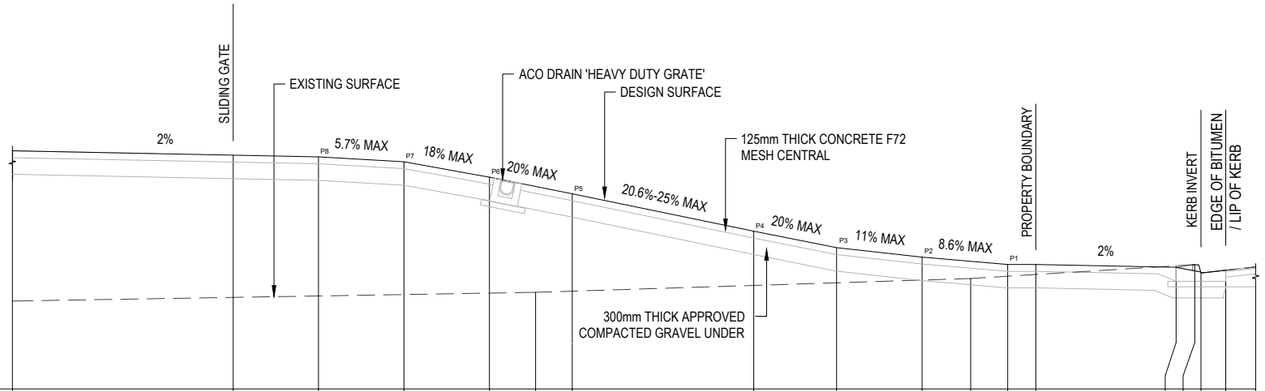

FINISHED DESIGN SURFACE LEVEL	141.314	141.234	141.203	141.115	140.836		140.536	139.854	139.554	139.388		139.256	139.256	139.200	139.139	139.100	139.150
EXISTING SURFACE	138.592					138.750					139.000				139.250		139.150
OFFSET	-18.546	-18.546	-13.000	-11.450	-9.900	-9.064	-8.400	-5.110	-3.610	-2.060	-1.180	-0.510	0.000	2.543	2.881	2.993	3.443

SECTION B
SCALE 1:100
C04

Risden Knightley - 991537
Registered Professional Engineer
BE Civil FIEAust CPEng NPR
13/06/**2025**
Tasmanian Accreditation No. CC2539X

Rev.	Amendment	Date
C	INCLUSION OF WSUD DETAILS AS PER REPORT	12.06.2025
B	ISSUED IN RESPONSE TO RFI. ISSUED FOR TENDER	22.05.2025
A	ISSUED FOR TENDER	05/05/2025

rjk Consulting Engineers

Designed: RJK
Drawn: ASW
Endorsed: RJK
Accreditation: CC2539X

Client: AMBULANCE TASMANIA
Project: 20 UNION STREET, LONGFORD
PROPOSED STATION

Drawing title: CIVIL SERVICES
DRIVEWAY PROFILE SECTIONS

Scale: 1:100
Original size: A3

Date: 21.03.2025
Status: TENDER ISSUE
Drawing No: 24/25TAS082
Sheet: C07
Revision: C

Risden Knightley - 991537

Registered Professional Engineer
BE Civil FIEAust CPEng NPR

13/06/**202**5

Tasmanian Accreditation No. CC2539X

Received Exhibited
13.06.2025

HYDRAULIC SERVICES NOTES: WATER RETICULATION

WC	15mm CW IV TO CISTERN.
B	15mm CW & MW IV TO BASIN.
SHR	15mm CW & MW IV TO SHOWER.
LT	20mm CW & HW IV TO LAUNDRY TUB WITH CONNECTION TO WM.
CS	15mm CW & HW POINTS TO TAPWARE.
HWC	RHEEM 315L COMERCIAL (product code:613 315) WITH ALL ANCILLARY VALVES. - INSTALL RHEEM DELUXE DUAL STAGE CIRCULATING PUMP ADJACENT TO CYLINDER.
RPZR	20mm TYCO RPZD ON HW & CW SERVICE. INSTALL SS WALL BOX HOUSING IN STORE AREA.
TMV	Ø20 CW & HW TO AQUABLEND 1500 TMV IN STAINLESS STEEL WALLBOX 400mm AFFL.
HT	Ø15 CW HOSE TAP WITH INTEGRAL VACCUM BREAKER. CONFIRM EXACT LOCATIONS ONSITE.
SK	20mm CW & 15mm HW IV FOR SINK & DISHASHER.
CS	Ø15 CW & HW TO CLEANERS SINK

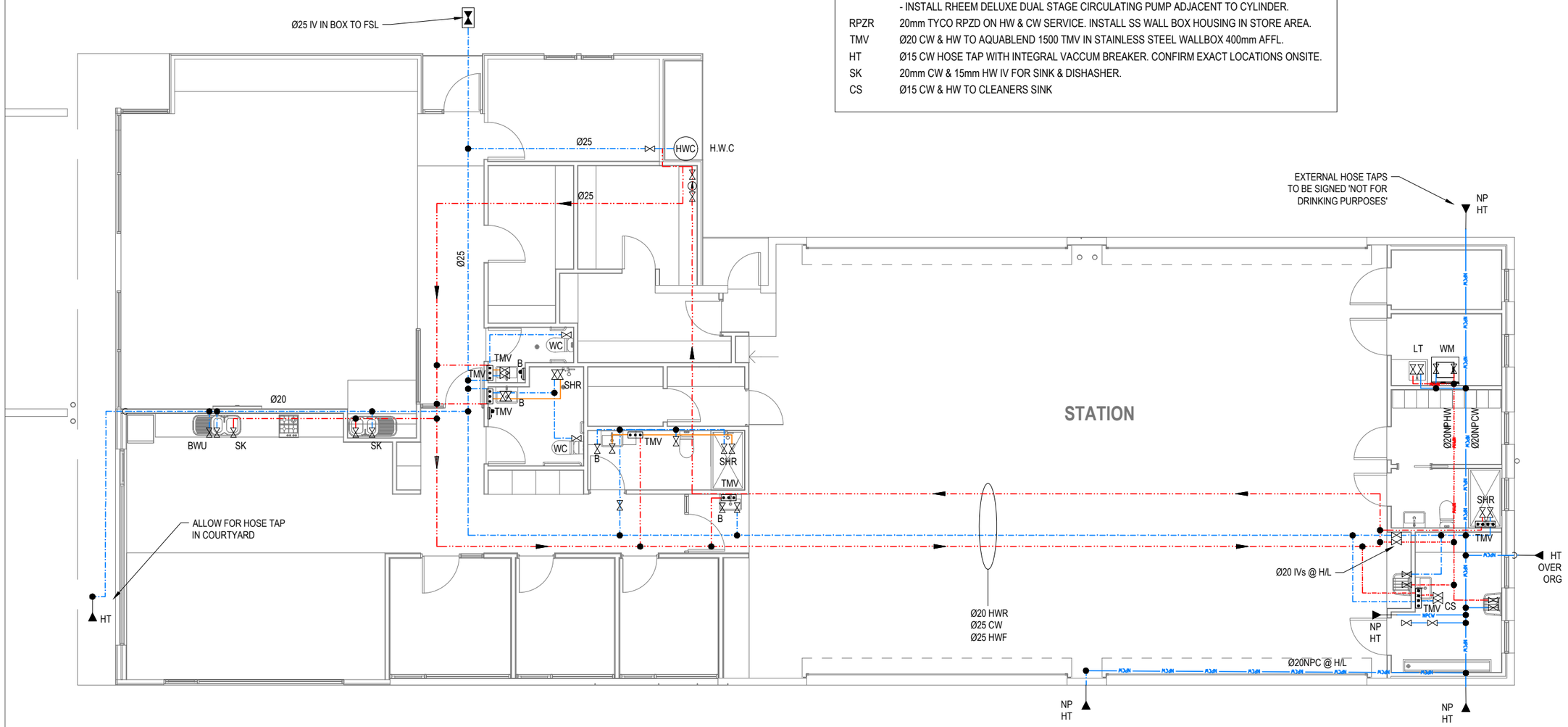

Rev.	Amendment	Date
C	INCLUSION OF WSUD DETAILS AS PER REPORT	12.06.2025
B	ISSUED IN RESPONSE TO RFI. ISSUED FOR TENDER	22.05.2025
A	ISSUED FOR TENDER	05/05/2025

rjk Consulting Engineers

Designed: RJK
Drawn: ASW
Endorsed: RJK
Accreditation: CC2539X

Client: AMBULANCE TASMANIA
Project: 20 UNION STREET, LONGFORD
PROPOSED STATION

Drawing title: HYDRAULIC SERVICES
STATION WATER RETICULATION

Scale: 1:100 Original size: A3

Date: 21.03.2025 Status: TENDER ISSUE

Drawing No: 24/25TAS082 Sheet: C08 Revision: C

Received
13.06.2025

Exhibited

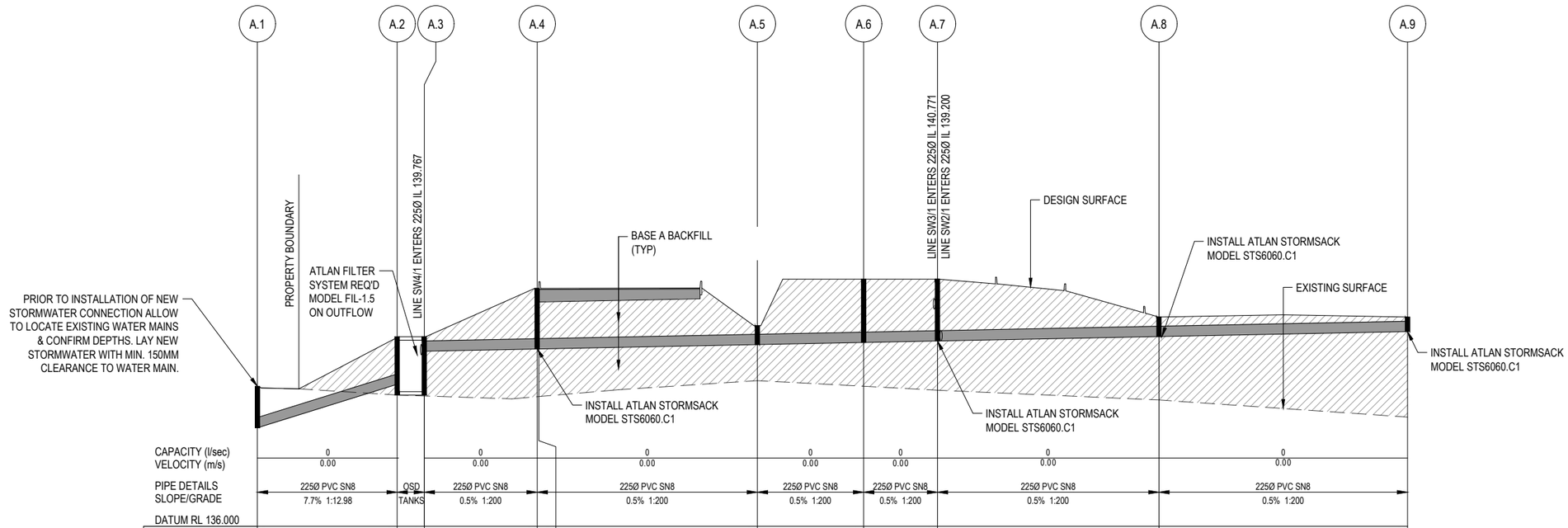

CAPACITY (l/sec)	0		0		0		0		0	0		0		0		0		0	
VELOCITY (m/s)	0.00		0.00		0.00		0.00		0.00	0.00		0.00		0.00		0.00		0.00	
PIPE DETAILS	225Ø PVC SN8		OSD		225Ø PVC SN8		225Ø PVC SN8		225Ø PVC SN8	225Ø PVC SN8		225Ø PVC SN8		225Ø PVC SN8		225Ø PVC SN8		225Ø PVC SN8	
SLOPE/GRADE	7.7% 1:12.98		TANKS		0.5% 1:200		0.5% 1:200		0.5% 1:200	0.5% 1:200		0.5% 1:200		0.5% 1:200		0.5% 1:200		0.5% 1:200	
DATUM RL 136.000																			
HGL	0.000	0.000	0.000		0.000		0.000		0.000	0.000		0.000		0.000		0.000		0.000	
DEPTH TO INVERT	0.912	1.034	0.318		1.329		0.298		0.414	1.390		1.359		0.428		0.318			
INVERT LEVEL	138.164	139.130	139.846		139.888		140.926		139.992	140.039		140.071		140.168		140.278			
FINISHED SURFACE	139.076	140.164	140.164		141.224		141.224		140.406	141.429		141.430		140.596		140.596			
EXISTING SURFACE	139.076	138.882	138.863		138.848		138.851		139.220	139.076		138.989		138.775		138.400			
CHAINAGE	0.000	12.282	12.282	14.794	2.512	24.590	9.796	24.740	0.15	43.942	19.202	53.280	9.338	59.769	6.489	79.231	19.477	101.078	21.847

STORMWATER PROFILE LINE A

STORMWATER LONGSECTION

SCALE: 1:500 HORIZONTAL
SCALE: 1:100 VERTICAL

Risden Knightley - 991537
Registered Professional Engineer
BE Civil FIEAust CPEng NPR
13/06/**202**5
Tasmanian Accreditation No. CC2539X

Rev.	Amendment	Date
C	INCLUSION OF WSUD DETAILS AS PER REPORT	12.06.2025
B	ISSUED IN RESPONSE TO RFI. ISSUED FOR TENDER	22.05.2025
A	ISSUED FOR TENDER	05/05/2025

rjk Consulting Engineers

Designed: RJK
Drawn: ASW
Endorsed: RJK
Accreditation: CC2539X

Client: AMBULANCE TASMANIA
Project: 20 UNION STREET, LONGFORD PROPOSED STATION

Drawing title: CIVIL SERVICES STORMWATER PROFILES SHEET 1
Scale: 1:500 HORIZ ; 1:100 VERT
Original size: A3

Date: 21.03.2025
Status: TENDER ISSUE
Drawing No: 24/25TAS082
Sheet: C09
Revision: C

Received
13.06.2025

Exhibited

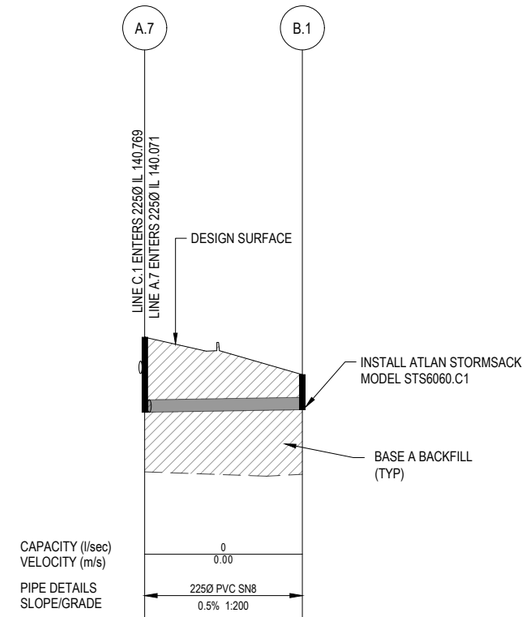

CAPACITY (l/sec) / VELOCITY (m/s)	0 / 0.00	
PIPE DETAILS / SLOPE/GRADE	225Ø PVC SN8 0.5% 1:200	
DATUM RL 136.000		
	0.000	0.000
DEPTH TO INVERT	1.358	0.635
INVERT LEVEL	140.071	140.117
FINISHED SURFACE	141.429	140.752
EXISTING SURFACE	138.991	138.948
CHAINAGE	0.000	19.477
	19.477	

STORMWATER PROFILE LINE B

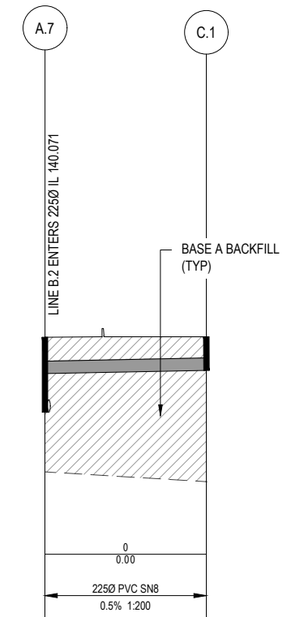

	0 / 0.00	
	225Ø PVC SN8 0.5% 1:200	
	0.000	0.000
	0.659	0.608
	140.771	140.830
	141.430	140.438
	138.989	138.814
	0.000	11.700
	11.700	

STORMWATER PROFILE LINE C

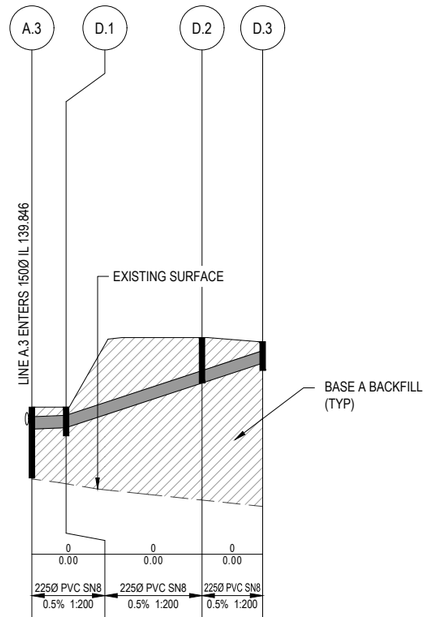

	0 / 0.00	0 / 0.00	0 / 0.00
	225Ø PVC SN8 0.5% 1:200	225Ø PVC SN8 0.5% 1:200	225Ø PVC SN8 0.5% 1:200
	0.000	0.000	0.000
	0.397	0.373	0.823
	139.767	139.791	140.600
	140.164	140.164	141.424
	138.863	138.777	138.481
	0.000	2.481	12.333
	2.481	9.851	4.395

STORMWATER PROFILE LINE D

STORMWATER LONGSECTION

SCALE: 1:400 HORIZONTAL
SCALE: 1:100 VERTICAL

Risden Knightley - 991537
Registered Professional Engineer
BE Civil FIEAust CPEng NPR
13/06/**202**5
Tasmanian Accreditation No. CC2539X

Rev.	Amendment	Date
C	INCLUSION OF WSUD DETAILS AS PER REPORT	12.06.2025
B	ISSUED IN RESPONSE TO RFI. ISSUED FOR TENDER	22.05.2025
A	ISSUED FOR TENDER	05/05/2025

rjk Consulting Engineers

Designed: RJK
Drawn: ASW
Endorsed: RJK
Accreditation: CC2539X

Client: AMBULANCE TASMANIA
Project: 20 UNION STREET, LONGFORD PROPOSED STATION

Drawing title: CIVIL SERVICES STORMWATER PROFILES SHEET2
Scale: 1:400 HORIZ ; 1:100 VERT
Original size: A3

Date: 21.03.2025
Status: TENDER ISSUE
Drawing No: 24/25TAS082
Sheet: C10
Revision: C

Received
13.06.2025

Exhibited

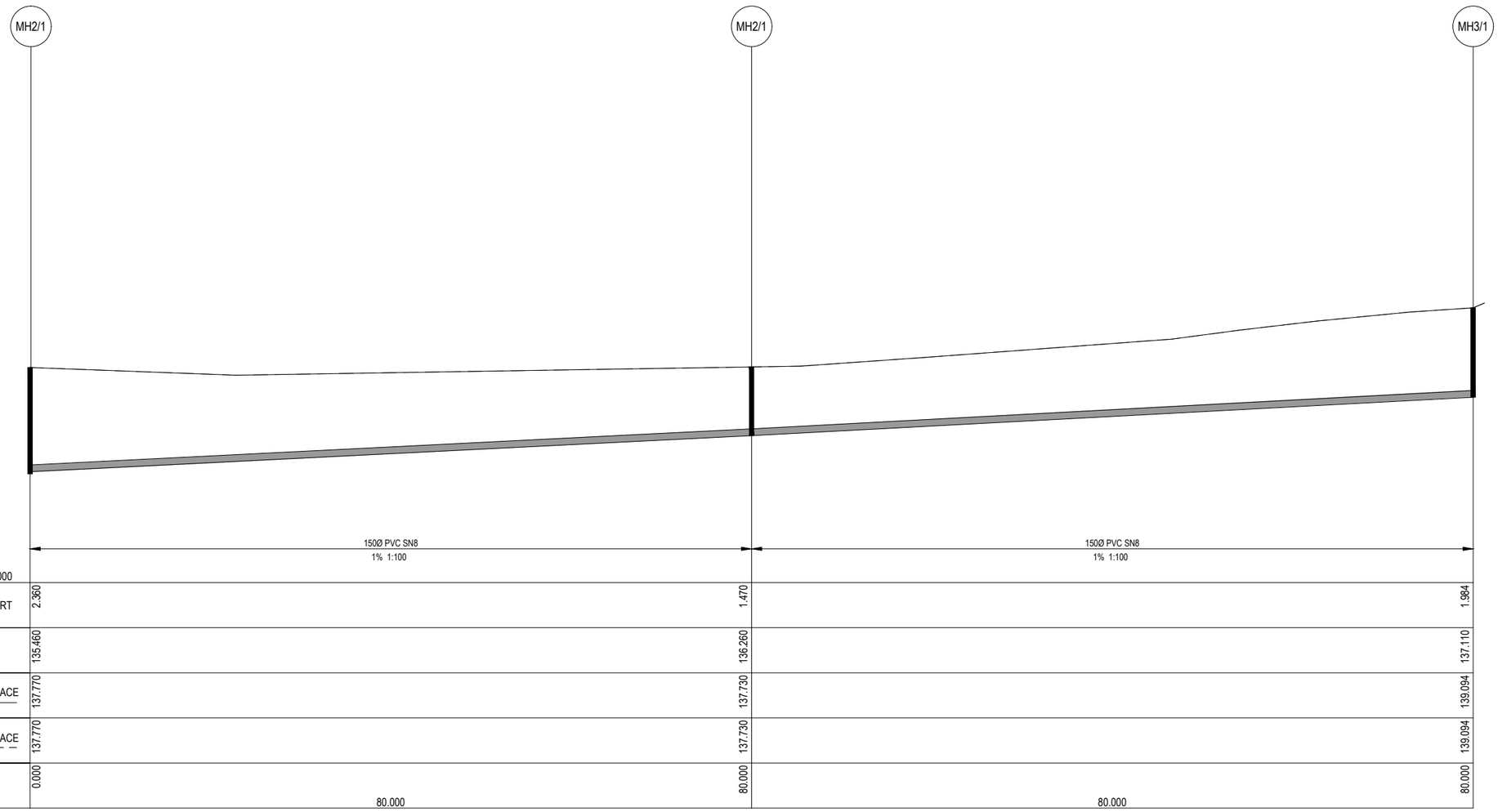

PIPE DETAILS SLOPE/GRADE DATUM RL 133.000	150Ø PVC SN8 1% 1:100		150Ø PVC SN8 1% 1:100
DEPTH TO INVERT	2.360	1.470	1.984
INVERT LEVEL	135.460	136.260	137.110
FINISHED SURFACE	137.770	137.730	139.094
EXISTING SURFACE	137.770	137.730	139.094
CHAINAGE	0.000	80.000	80.000
	80.000		80.000

SEWER LINE 1

SEWER LONGSECTION

SCALE: 1:500 HORIZONTAL
SCALE: 1:100 VERTICAL

Risden Knightley - 991537
Registered Professional Engineer
BE Civil FIEAust CPEng NPR
13/06/**202**5
Tasmanian Accreditation No. CC2539X

Rev.	Amendment	Date
C	INCLUSION OF WSUD DETAILS AS PER REPORT	12.06.2025
B	ISSUED IN RESPONSE TO RFI. ISSUED FOR TENDER	22.05.2025
A	ISSUED FOR TENDER	05/05/2025

rjk Consulting Engineers

Designed: RJK
Drawn: ASW
Endorsed: RJK
Accreditation: CC2539X

Client: AMBULANCE TASMANIA
Project: 20 UNION STREET, LONGFORD
PROPOSED STATION

Drawing title: CIVIL SERVICES
SEWER PROFILES
SHEET1
Scale: 1:500 HORIZ ; 1:100 VERT
Original size: A3

Date: 21.03.2025
Status: TENDER ISSUE
Drawing No: 24/25TAS082
Sheet: C11
Revision: C

Exhibited

Received
06/05/2025



LOCATION PLAN

NEW AMBULANCE STATION

20 UNION STREET, LONGFORD

DEVELOPMENT APPLICATION

REV.	AMENDMENT	DATE

NOTE: Do not scale off drawings. Figured dimensions take precedence. Contractor to verify all dimensions on site and notify architect of discrepancies before commencing works. Drawings to be read in conjunction with specification and other contract drawings. Construction is not to commence on any buildings or associated works contained in this drawing unless the drawing is stamped 'for construction'. Unless otherwise agreed, Archadia Architecture is the owner of the copyright subsisting in these drawings, plans, designs & specifications. They must not be used, reproduced or copied, in whole or in part, nor may the information, ideas & concepts therein contained be disclosed to any person without the prior written consent of Archadia Architecture.

Archadia Architecture
T: 0414 259 543
E: studio@archadia.net.au
W: www.archadia.net.au
ABN: 19 455 889 186

DRAWING NAME: COVER SHEET

DATE: 11-4-25 | ISSUE: DEVELOPMENT APPLICATION

PROJECT No: 2021-07 | DRAWING No: DA-00
DRAWN BY: | REV: A
CHECKED BY: JP | SCALE :

Exhibited

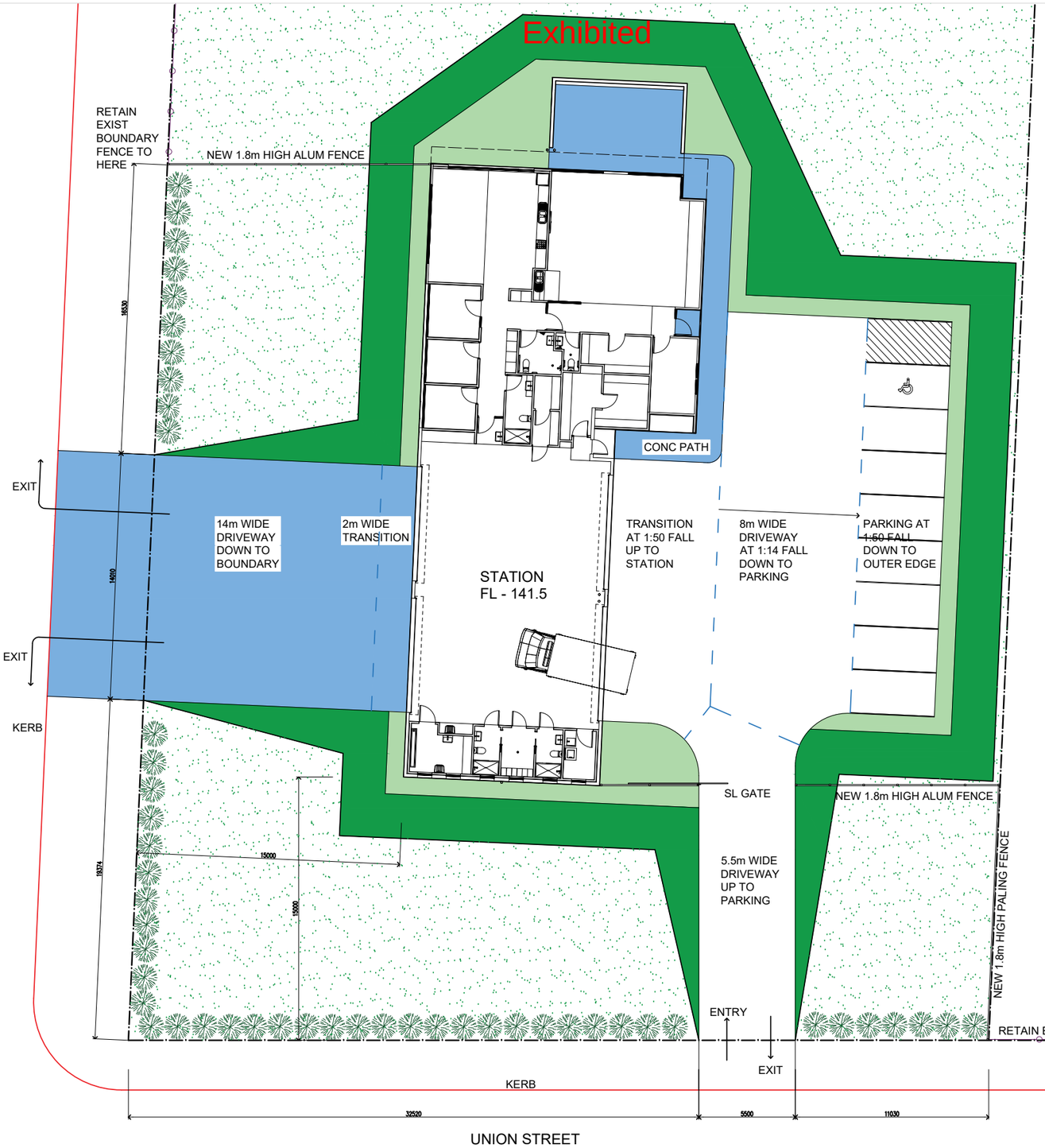

Received
06/05/2025

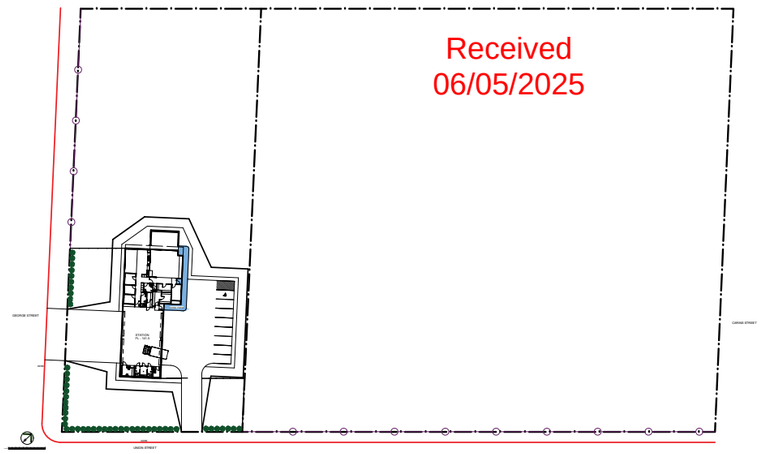

STATION AREA SITE PLAN
SCALE: 1:1500

SCHEDULES

COLOUR SCHEDULE

STATION

PRE-CAST CONCRETE WALLS	ADMIXTURE BY COLOURMIX, LIMESTONE
METAL CLADDING	COLORBOND FINISH, WALLABY
ROOF	COLORBOND FINISH, SURFMIST
ROLLER DOORS	COLORBOND FINISH, WALLABY

SITE

ALUM FENCING	POWDER COAT FINISH, BUSHLAND
SIDE & REAR PALING FENCE	NATURAL
PAVERS	ISLAND BLOCK & PAVING, MIST
RETAINING WALL BLOCKS	NATURAL GREY

LANDSCAPE PLAN
REFER TO LANDSCAPE ARCHITECT'S PLANTING PLAN

AREA SCHEDULE

STATION SITE AREA:	20,404m2
STATION FLOOR AREA:	447m2

KEY

- NEW BATTER - REFER PLANTING
- EXTENT OF APRON TO PERIMETER
- CONC PAVEMENT
- BITUMINOUS ASPHALT
- REFER TO LANDSCAPING PLAN

REV.	AMENDMENT	DATE

NOTE: Do not scale off drawings. Figured dimensions take precedence. Contractor to verify all dimensions on site and notify architect of discrepancies before commencing works. Drawings to be read in conjunction with specification and other contract drawings. Construction is not to commence on any buildings or associated works contained in this drawing unless the drawing is stamped 'for construction'. Unless otherwise agreed, Archadia Architecture is the owner of the copyright subsisting in these drawings, plans, designs & specifications. They must not be used, reproduced or copied, in whole or in part, nor may the information, ideas & concepts therein contained be disclosed to any person without the prior written consent of Archadia Architecture.

Archadia Architecture
E: studio@archadia.net.au T: 0414 259 543
W: www.archadia.net.au ABN: 19 455 889 186

PROJECT: NEW AMBULANCE STATION
ADDRESS: CRNR UNION & GEORGE STREETS, LONGFORD
CLIENT: THE CROWN - DEPARTMENT OF HEALTH

DRAWING: SITE PLAN
DATE: 11-4-25 ISSUE: DEVELOPMENT APPLICATION

PROJECT No: 2021-07
DRAWING No: DA-01
DRAWN BY:
REV: A:
CHECKED BY: JP
SCALE :1:250, 1500

Exhibited

Received
06/05/2025

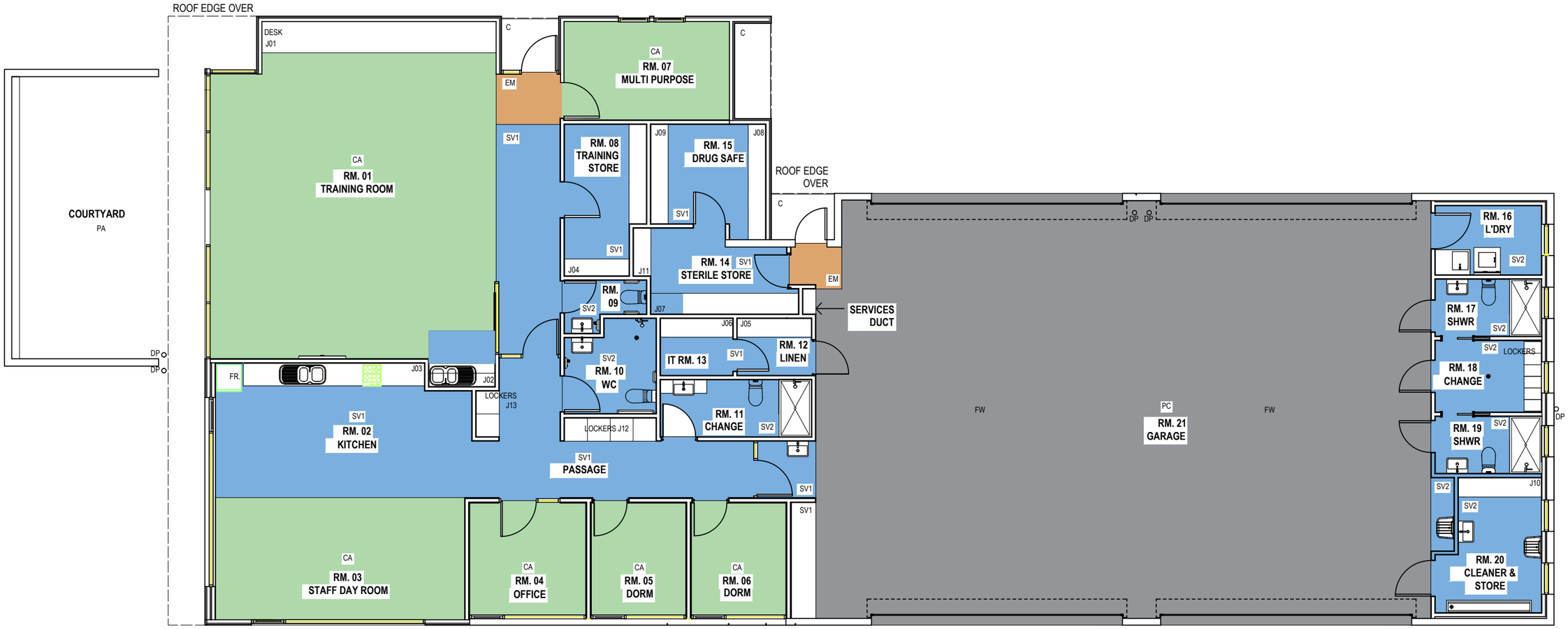

REV.	AMENDMENT	DATE

NOTE: Do not scale off drawings. Figured dimensions take precedence. Contractor to verify all dimensions on site and notify architect of discrepancies before commencing works. Drawings to be read in conjunction with specification and other contract drawings. Construction is not to commence on any buildings or associated works contained in this drawing unless the drawing is stamped 'for construction'. Unless otherwise agreed, Archadia Architecture is the owner of the copyright subsisting in these drawings, plans, designs & specifications. They must not be used, reproduced or copied, in whole or in part, nor may the information, ideas & concepts therein contained be disclosed to any person without the prior written consent of Archadia Architecture.

Archadia Architecture

E: studio@archadia.net.au T: 0414 259 543
W: www.archadia.net.au ABN: 19 455 889 186

PROJECT: NEW AMBULANCE STATION

ADDRESS: CRNR UNION & GEORGE STREETS, LONGFORD
CLIENT: THE CROWN - DEPARTMENT OF HEALTH

DRAWING:
STATION - FLOOR PLAN

DATE: 11-4-25 | ISSUE: DEVELOPMENT APPLICATION

PROJECT No:	DRAWING No:
2021-07	DA.02
DRAWN BY:	REV:
CHECKED BY: JP	SCALE :1:100

Exhibited

Received
06/05/2025

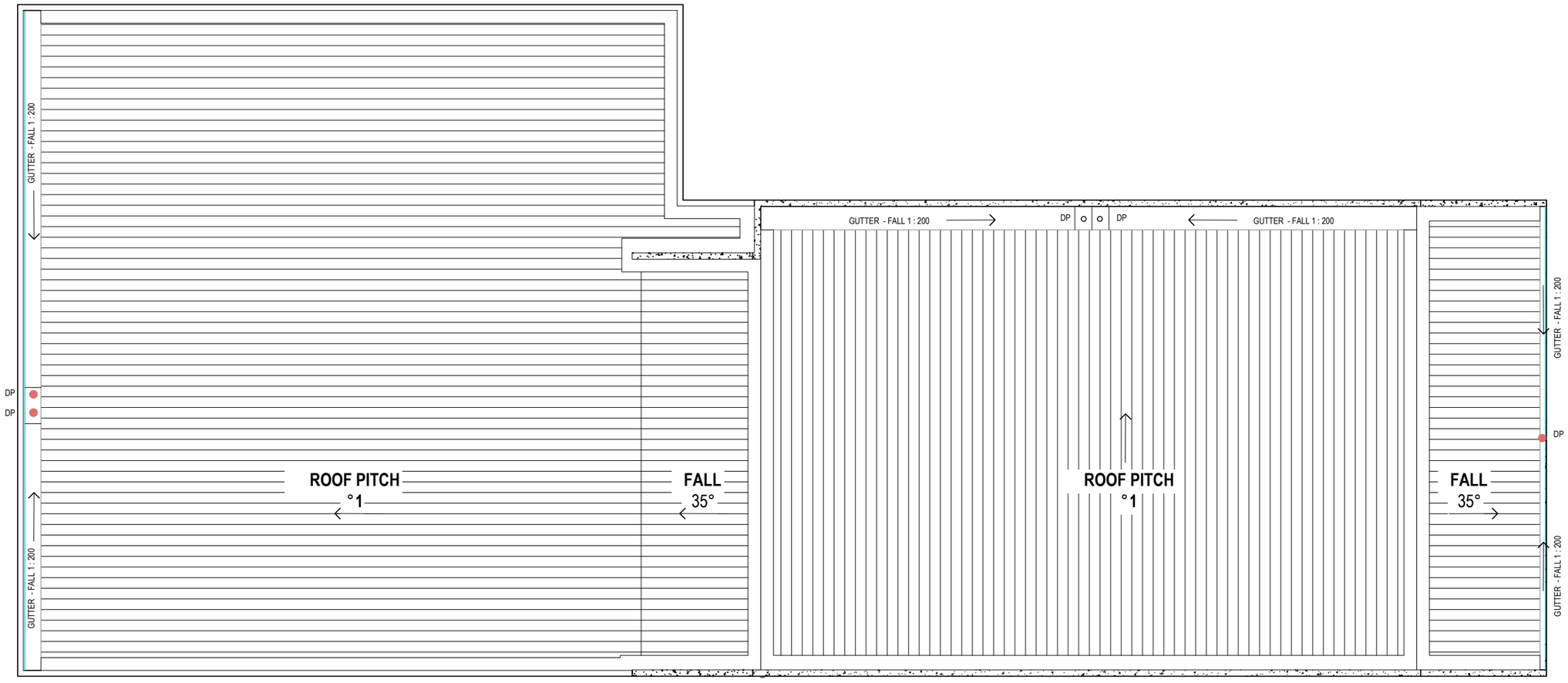

REV.	AMENDMENT	DATE

NOTE: Do not scale off drawings. Figured dimensions take precedence. Contractor to verify all dimensions on site and notify architect of discrepancies before commencing works. Drawings to be read in conjunction with specification and other contract drawings. Construction is not to commence on any buildings or associated works contained in this drawing unless the drawing is stamped 'for construction'. Unless otherwise agreed, Archadia Architecture is the owner of the copyright subsisting in these drawings, plans, designs & specifications. They must not be used, reproduced or copied, in whole or in part, nor may the information, ideas & concepts therein contained be disclosed to any person without the prior written consent of Archadia Architecture.

Archadia Architecture

E: studio@archadia.net.au T: 0414 259 543
W: www.archadia.net.au ABN: 19 455 889 186

PROJECT: NEW AMBULANCE STATION

ADDRESS: CRNR UNION & GEORGE STREETS, LONGFORD
CLIENT: THE CROWN - DEPARTMENT OF HEALTH

DRAWING:
STATION - ROOF PLAN

DATE: 11-4-25 | ISSUE: DEVELOPMENT APPLICATION

PROJECT No:	DRAWING No:
2021-07	DA.03
DRAWN BY:	REV:
CHECKED BY: JP	SCALE :1:100

Exhibited

Received
06/05/2025

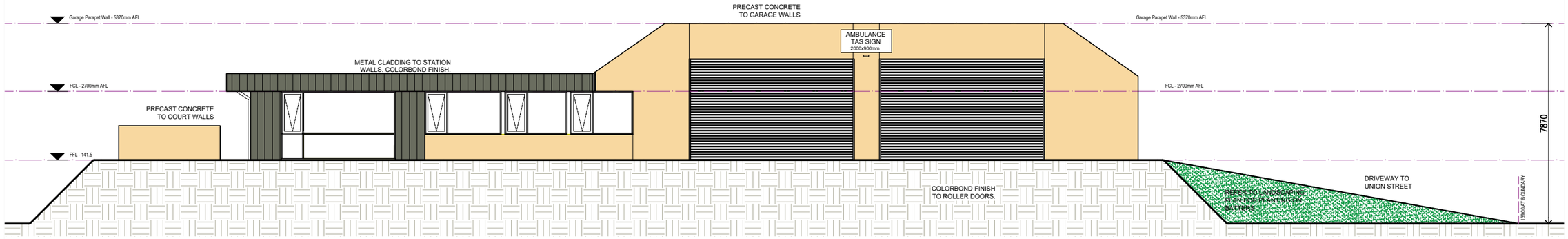

GEORGE STREET - WEST ELEVATION

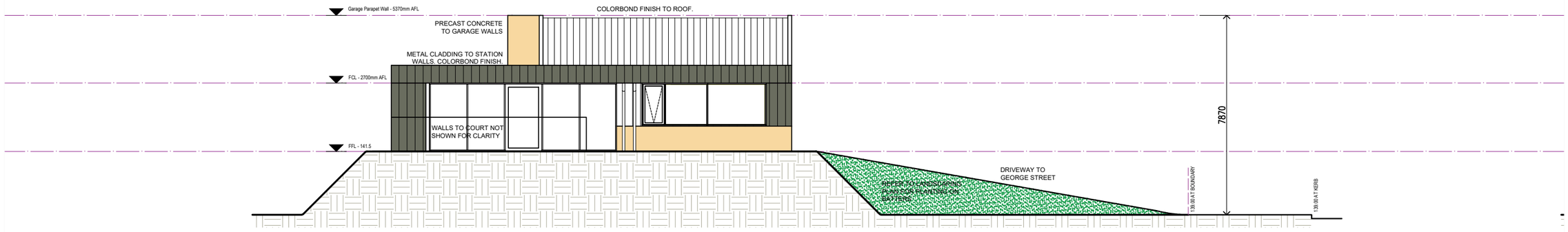

NORTH ELEVATION

NOTE: Do not scale off drawings. Figured dimensions take precedence. Contractor to verify all dimensions on site and notify architect of discrepancies before commencing works. Drawings to be read in conjunction with specification and other contract drawings. Construction is not to commence on any buildings or associated works contained in this drawing unless the drawing is stamped 'for construction'. Unless otherwise agreed, Archadia Architecture is the owner of the copyright subsisting in these drawings, plans, designs & specifications. They must not be used, reproduced or copied, in whole or in part, nor may the information, ideas & concepts therein contained be disclosed to any person without the prior written consent of Archadia Architecture.

Archadia Architecture

E: studio@archadia.net.au T: 0414 259 543
W: www.archadia.net.au ABN: 19 455 889 186

PROJECT: NEW AMBULANCE STATION

ADDRESS: CRNR UNION & GEORGE STREETS, LONGFORD
CLIENT: THE CROWN - DEPARTMENT OF HEALTH

DRAWING:
STATION - ELEVATIONS 1

DATE: 11-4-25 | ISSUE: DEVELOPMENT APPLICATION

PROJECT No:	DRAWING No:
2021-07	DA.04
DRAWN BY:	REV: A
CHECKED BY: JP	SCALE :1:150

Exhibited

Received
06/05/2025

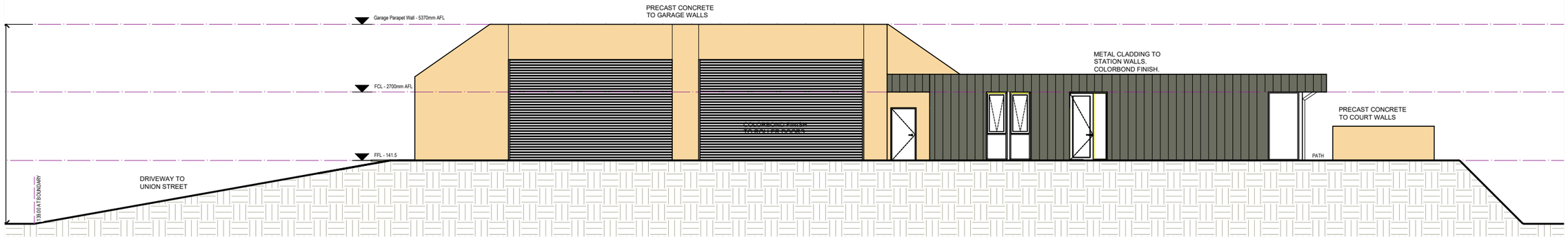

EAST ELEVATION

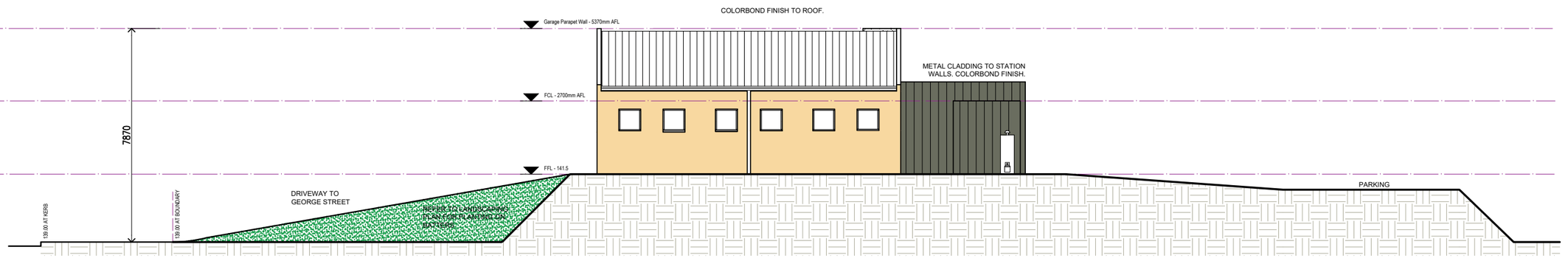

UNION STREET - SOUTH ELEVATION

REV.	AMENDMENT	DATE

NOTE: Do not scale off drawings. Figured dimensions take precedence. Contractor to verify all dimensions on site and notify architect of discrepancies before commencing works. Drawings to be read in conjunction with specification and other contract drawings. Construction is not to commence on any buildings or associated works contained in this drawing unless the drawing is stamped 'for construction'. Unless otherwise agreed, Archadia Architecture is the owner of the copyright subsisting in these drawings, plans, designs & specifications. They must not be used, reproduced or copied, in whole or in part, nor may the information, ideas & concepts therein contained be disclosed to any person without the prior written consent of Archadia Architecture.

Archadia Architecture

E: studio@archadia.net.au T: 0414 259 543
W: www.archadia.net.au ABN: 19 455 889 186

PROJECT: NEW AMBULANCE STATION

ADDRESS: CRNR UNION & GEORGE STREETS, LONGFORD
CLIENT: THE CROWN - DEPARTMENT OF HEALTH

DRAWING:
STATION - ELEVATIONS 2

DATE: 11-4-25 | ISSUE: DEVELOPMENT APPLICATION

PROJECT No: 2021-07 | DRAWING No: DA.05
DRAWN BY: | REV:
CHECKED BY: JP | SCALE :1:150

Exhibited

Received
06/05/2025

GEORGE STREET

TALL MESH SECURITY FENCE ON BDY

STATION
FL - 141.5

KERB

KERB

UNION STREET

WATER METER CCP

TALL MESH SECURITY FENCE

54°

REV.	AMENDMENT	DATE

NOTE: Do not scale off drawings. Figured dimensions take precedence. Contractor to verify all dimensions on site and notify architect of discrepancies before commencing works. Drawings to be read in conjunction with specification and other contract drawings. Construction is not to commence on any buildings or associated works contained in this drawing unless the drawing is stamped 'for construction'. Unless otherwise agreed, Archadia Architecture is the owner of the copyright subsisting in these drawings, plans, designs & specifications. They must not be used, reproduced or copied, in whole or in part, nor may the information, ideas & concepts therein contained be disclosed to any person without the prior written consent of Archadia Architecture.

Archadia Architecture

E: studio@archadia.net.au T: 0414 259 543
W: www.archadia.net.au ABN: 19 455 889 186

PROJECT: NEW AMBULANCE STATION

ADDRESS: CRNR UNION & GEORGE STREETS, LONGFORD
CLIENT: THE CROWN - DEPARTMENT OF HEALTH

DRAWING:
SITE SURVEY OVERLAY

DATE: 11-4-25 | ISSUE: DEVELOPMENT APPLICATION

PROJECT No: 2021-07 | DRAWING No: DA-06
DRAWN BY: | REV: A:
CHECKED BY: JP | SCALE :1:250



PLANT SCHEDULE

ABB.	BOTANICAL NAME	COMMON NAME	POT SIZE	QTY.
TREES				
Lst	*Liquidamber styraciflua*	Liquidamber	45L	11
SHRUBS / FEATURES				
Cal	*Correa alba*	White Correa	140mm pot	20
Lbr	*Leucophyta brownii*	Cushion Bush	140mm pot	30
Wfr	*Westringia fruiticosa*	Coastal Rosemary	140mm pot	85
GRASSES / GROUNDCOVERS				
Ckf	*Calamagrostis 'Karl Foerster'*	Feather Reed Grass	tubestock	71
Ccn	*Convolvulus cneorum*	Silver Bush	140mm pot	93
Cgl	*Craspedia globosa*	Billy Buttons	tubestock	77
Dmo	*Diplarrena moraea*	Native Flag Iris	tubestock	160
Llo	*Lomandra longifolia*	Mat Rush	tubestock	89
Mpa	*Myoporum parvifolium*	Creeping Boobialla	tubestock	177
Ppo	*Poa poiformis*	Coastal Tussock Grass	tubestock	123

Received
06/05/2025


Liquidamber styraciflua


Correa alba


Leucophyta brownii


Westringia fruiticosa


Calamagrostis 'Karl Foerster'

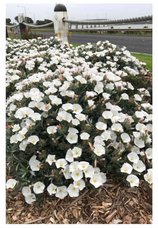
Convolvulus cneorum


Craspedia gobosa


Diplarrena moraea


Lomandra longifolia

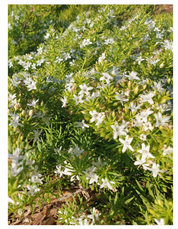
Myoporum parvifolium


Poa poiformis

PLANTING KEY

REFER TO PLANTING SCHEDULE (L001) FOR PLANT SPECIES INFORMATION AND QUANTITIES

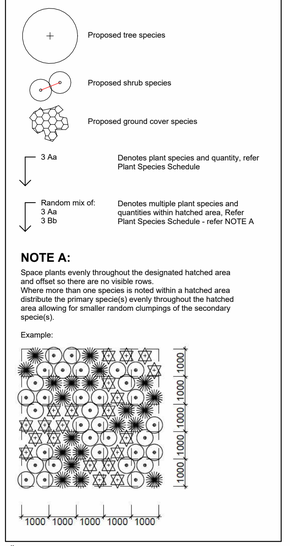

NOTE A:

Space plants evenly throughout the designated hatched area and offset so there are no visible rows.
Where more than one species is noted within a hatched area distribute the primary specie(s) evenly throughout the hatched area allowing for smaller random clumpings of the secondary specie(s).

Example:

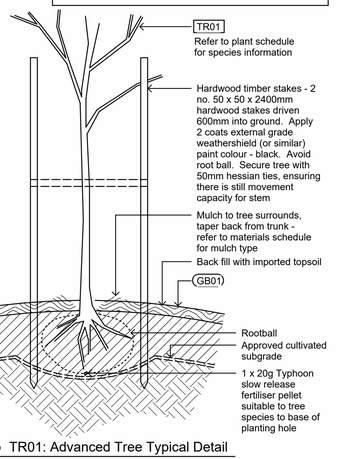

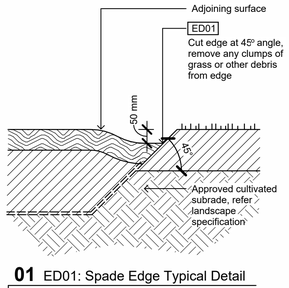

01 ED01: Spade Edge Typical Detail

Scale 1:10@A1

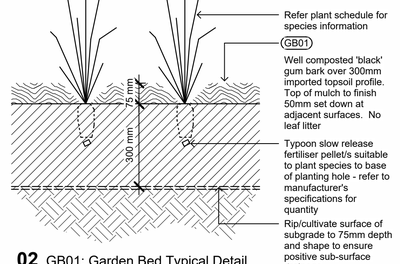

02 GB01: Garden Bed Typical Detail

Scale 1:10@A1

03 TR01: Advanced Tree Typical Detail

Scale 1:20@A1

GENERAL NOTES

Coordination
These drawings are to be read in conjunction with Architect's and Engineer's documentation and specifications.

Notify the superintendent immediately of any discrepancies between landscape documentation package and architect's documenation, or existing site conditions.

Services
Locations of any site services are not known; contractor to conduct Dial Before You Dig enquiry and full review of architect's documentation prior to the commencement of works.

Locate and mark all existing services prior to construction. Repair any existing services damaged during construction at contractor's expense.

Levels and drainage
Ensure positive drainage to all surfaces and subgrades to pits and agricultural drains, if applicable. Contractor is to notify the Superintendent immediately of any levels or drainage conflict between architect's documentation, landscape documentation and existing site conditions.

Soft landscaping
All soft landscape works to be carried out by a qualified landscape contractor.

Garden bed preparation
Remove everything on or above site surface including rubbish, scrap, grass, vegetable matter and organic debris, scrub, trees, timber, stumps, boulders and rubble.

Excavate planting beds to allow for soil depths per garden bed types as documented. Shape the base of garden beds to fall to subsoil drains. Break up subsoil layer when dry to a further depth of 75mm and cultivate to an even loose loam.

Weed eradication by manual removal only - no herbicide use permitted.

Subsoil
Rip parallel to the final contours. Do not rip when the subsoil is wet or plastic. Do not rip within the dripline of trees to be retained.

Cultivate to a minimum depth of 100mm. Do not distrub services or tree roots - if required, cultivate these by hand. Cultivate manually within 300mm of paths or structures. Remove stones exceeding 25mm, clods of earth exceeding 50mm, and weeds, rubbish or other deleterious material brought to the surface during cultivation. Trim the surface to design levels after cultivate.

Subsoil additives
Apply additives after ripping and incorporate into the upper 75mm layer of the subsoil.

Gypsum: incorporate at the rate of 0.25kg/m2.

Topsoil
'Topsoil' refers to screened salvaged site topsoil, imported topsoil or a combination of the two. With the exception of seeded grass areas, preference is for use of salvaged site topsoils where existing site topsoils are of acceptable quality. Where there is insufficient site topsoil to complete the works, imported topsoils are to be used in addition to salvaged site soils. Imported topsoils are to be fully incorporated with salvaged site soils.

Imported topsoil to AS 4454, potting mixes to AS 3743, composts, soil conditioners and mulches to AS 4454.

Areas for use of site topsoil: garden bed areas.
Areas for use of imported topsoil: seeded grass areas.

Confirm stockpile locations with client prior to construction.

Spread topsoil on prepared subsoil and grade evenly, making allowances for finished levels after light compaction. Topsoil to 300mm depth in garden beds, 150mm in grassed areas. Dispose of surplus topsoil off-site.

Seeded grass
'Sun and Shade' seed mix. Spread evenly over 150mm sandy loam, smooth even surface. Establish to consistent sward. Allow to top dress over seed and manage weeds until established.

New trees
Proposed tree specimens to be inspected by landscape architect prior to delivery to site.

Plant species
Supply trees with the following properties:
- Free from injury
- Self-supporting, with calliper at any given point on the stem greater than the calliper at any higher point on the stem
- Health: foliage size, texture and colour at time of delivery consistent with that of healthy specimens for the nominated species
- Vigour: extension growth consistent with that exhibited in vigorous specimens of the nominated species
- Damage: free from damage and from restricted habit due to growth in nursery rows
- Stress: free from stress resulting from inadequate watering, excessive shade or excessive sunlight experienced at any time during their development
- Site environment: grown and hardened off to suit anticipated site conditions at the time of delivery
- Root development: grown in their final containers for the following periods:
  - * plants <25L size: more than 6 weeks
  - * plants >25L size: more than 12 weeks
- Pests and disease: free from attack by pests or disease

Root systems
Supply plant material with a root system that is:
- Well proportioned in relation to the size of the plant material
- Conducive to successful transplantation
- Free of any indication of having been restricted or damaged
- Root ball proportionate and to be expected of the specified stock size

Do not provide root bound stock.
Do not provide stock grown less than 6 months in the specified stock size.
Notify superintendent prior to planting to allow for inspection of plant material prior to installation.

Defects period
26 week defect period for soft landscape items starting at practical completion.

Maintenance period
13 weeks maintenance period for all soft landscape works.

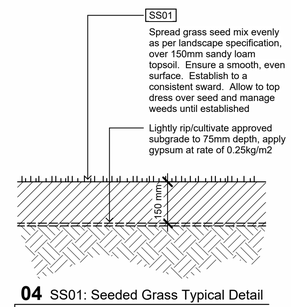

04 SS01: Seeded Grass Typical Detail

Scale 1:10@A1

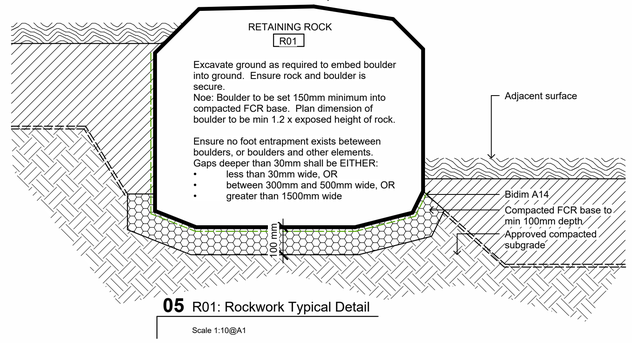

05 R01: Rockwork Typical Detail

Scale 1:10@A1

ISSUE	STATUS	DATE	REVIEWED
A	Issue for Pricing	01-04-2025	PST
B	Issue for Pricing	05-05-2025	PST

L100

SHEET TITLE
Landscape Plan

CLIENT
Archadia Architecture

PROJECT NAME
Longford Ambulance Station

SITE ADDRESS
20 Union Street
Longford TAS 7301

PROJECT NO.
25-038

STAGE
DOC

DESIGNED
AK/MS

DRAWN
AK

SCALE
1:200@A1

DO NOT SCALE OFF DRAWINGS

PLAYSTREET LANDSCAPE ARCHITECTURE
92 ARGYLE STREET, NIPALUNA HOBART 7009
OFFICE:0455 022 266
WWW.PLAYSTREET.COM.AU

©Copyright 2025

20th June 2025

North Midlands Council

Planning Department

Longford TAS 7301

Dear Council

Re: Proposed Longford Ambulance Station site – corner Union and George Streets.

We are writing to provide additional information in response to council's recent RFIs and SES concerns regarding the risk of flood and its potential to impact the station's effectiveness. Please note the context below.

Ambulance Tasmania (AT) has a number of criteria when determining the optimal location of a new ambulance station. In the case of Longford, considerations included:

- Located within the town area, to minimise response times to emergency incidents in Longford. In addition, Branch Stations such as Longford depend on support of Volunteer Ambulance Officers, and locating the station in the town maximises access to the station for the majority of volunteers.
- Easy access to arterial roads, to minimise response times to emergency incidents outside the town. For the Longford station the majority of these responses are to the north.
- Avoiding regular ambulance traffic through sensitive areas such as school zones.
- Avoiding immediate proximity to commercial areas with high vehicle and pedestrian traffic.

The Longford Ambulance Station is staffed by a single ambulance crew. The station building provides an ambulance garage, cleaning facilities, crew accommodation and a training area. Minimal stores are held at the station as restocking primarily occurs at the Regional Headquarters Station in Launceston.AT is aware that the proposed station site is approximately 200m within the 1:100 year Annual Exceedance Probability (AEP) flood area. This risk has been assessed and is considered to be acceptable, given the scale, staffing and role of the station. In addition, the design incorporates a raised floor level to reduce the risk of the station being inundated in a flood event. AT's business continuity plan for the station will address the risk of

the station being isolated in a 1:100 year AEP flood, with the ambulance vehicles and crew being relocated in advance of the flood to a nearby ambulance station or an alternate location within or nearby Longford, with the exact location being determined by AT's operational priorities at the time. AT's operations will not be adversely impacted by loss of access to the station during a flood event.

We trust that the above information is useful in demonstrating that the proposed station on Union Street is an important facility to Ambulance Tasmania that we hope council will support.

Yours sincerely,



John PadasP

Archadia Architecture

Submission to Planning Authority Notice

Application details

Council Planning Permit No.	PLN-25-0055
Council notice date	6/05/2025
TasWater Reference No.	TWDA 2025/00466-NMC
Date of response	04/06/2025
TasWater Contact	Shaun Verdouw
Phone No.	

Response issued to

Council name	NORTHERN MIDLANDS COUNCIL
Contact details	Planning@nmc.tas.gov.au
Development details	
Address	20 UNION ST, LONGFORD
Property ID (PID)	6737345
Description of development	New Ambulance Station

Schedule of drawings/documents

Prepared by	Drawing/document No.	Revision No.	Issue date
Rjk Consulting Engineers	24/25TAS082-G01 to C11	B	22/05/2025
Archadia Architecture	2021-07 DA-00 to DA-06	-	11/04/2025

Conditions

Pursuant to the *Water and Sewerage Industry Act* 2008 (TAS) Section 56P(1) TasWater imposes the following conditions on the permit for this application:

CONNECTIONS, METERING & BACKFLOW

1. A suitably sized water supply with metered connection and sewerage system and connection to the development must be designed and constructed to TasWater's satisfaction and be in accordance with any other conditions in this permit.
2. Any removal/supply and installation of water meters and/or the removal of redundant and/or installation of new and modified property service connections must be carried out by TasWater at the developer's cost.
3. Prior to commencing construction of the development, any water connection utilised for construction must have a backflow prevention device and water meter installed, to the satisfaction of TasWater.

ASSET CREATION & INFRASTRUCTURE WORKS

Tasmanian Water & Sewerage Corporation Pty Ltd
GPO Box 1393 Hobart, TAS 7001
development@taswater.com.au
ABN: 47 162 220 653

4. Prior to applying for an Engineering Design Approval, the developer must physically locate all existing infrastructure to provide sufficient information for accurate design and physical works to be undertaken.
5. Plans submitted with the application for Engineering Design Approval must, to the satisfaction of TasWater show, all existing, redundant and/or proposed property services and mains.
6. Prior to applying for a Permit to Construct new infrastructure the developer must obtain from TasWater Engineering Design Approval for new TasWater infrastructure. The application for Engineering Design Approval must include engineering design plans prepared by a suitably qualified person showing the hydraulic servicing requirements for water and sewerage to TasWater's satisfaction.
7. Prior to works commencing, a Permit to Construct must be applied for and issued by TasWater. All infrastructure works must be inspected by TasWater and be to TasWater's satisfaction.
8. Prior to undertaking any works related to water and sewerage, physical markers must be in place that clearly identify where water and/or sewer connections are to be made in accordance with any approved plan to TasWater's satisfaction.
9. In addition to any other conditions in this permit, all works must be constructed under the supervision of a suitably qualified person in accordance with TasWater's requirements.
10. Prior to the issue of a Certificate of Water and Sewerage Compliance (Building and/or Plumbing) all additions, extensions, alterations or upgrades to TasWater's water and sewerage infrastructure required to service the development, are to be completed generally as shown on, and in accordance with, the plans listed in the schedule of drawings/documents, and are to be constructed at the expense of the developer to the satisfaction of TasWater, with live connections performed by TasWater.
11. After testing/disinfection, to TasWater's requirements, of newly created works, the developer must apply to TasWater for connection of these works to existing TasWater infrastructure, at the developer's cost.
12. At practical completion of the water and sewerage works and prior to TasWater issuing a Consent to a Register Legal Document / applying to TasWater for a Certificate of Water and Sewerage Compliance (Building and/or Plumbing), the developer must obtain a Certificate of Practical Completion from TasWater for the works that will be transferred to TasWater. To obtain a Certificate of Practical Completion:
    a. Written confirmation from the supervising suitably qualified person certifying that the works have been constructed in accordance with the TasWater approved plans and specifications and that the appropriate level of workmanship has been achieved.
    b. A request for a joint on-site inspection with TasWater's authorised representative must be made.
    c. Security for the twelve (12) month defects liability period to the value of 10% of the works must be lodged with TasWater. This security must be in the form of a bank guarantee.
    d. Work As Constructed drawings and documentation must be prepared by a suitably qualified person to TasWater's satisfaction and forwarded to TasWater.

    Upon TasWater issuing a Certificate of Practical Completion, the newly constructed infrastructure is deemed to have transferred to TasWater.

13. After the Certificate of Practical Completion has been issued, a 12-month defects liability period applies to this infrastructure. During this period all defects must be rectified at the developer's cost and to the satisfaction of TasWater. A further 12-month defects liability period may be applied to defects after rectification. TasWater may, at its discretion, undertake rectification of any defects at the developer's cost. Upon completion, of the defects liability period the developer must request TasWater to issue a "Certificate of Final Acceptance". TasWater will release any security held for the defect's liability period.

14. The developer must take all precautions to protect existing TasWater infrastructure. Any damage caused to existing TasWater infrastructure during the construction period must be promptly reported to TasWater and repaired by TasWater at the developer's cost.

15. Ground levels over the TasWater assets and/or easements must not be altered without the written approval of TasWater.

DEVELOPER CHARGES

16. Prior to TasWater issuing a Certificate(s) for Certifiable Work (Building) and/or (Plumbing), the applicant or landowner as the case may be, must pay a developer charge totalling $1,757.00 to TasWater for water infrastructure for 1 additional Equivalent Tenements, indexed by the Consumer Price Index All groups (Hobart) from the date of this Submission to Planning Authority Notice until the date it is paid to TasWater.

17. Prior to TasWater issuing a Certificate(s) for Certifiable Work (Building) and/or (Plumbing), the applicant or landowner as the case may be, must pay a developer charge totalling $3,514.00 to TasWater for sewerage infrastructure for 2 additional Equivalent Tenements, indexed by the Consumer Price Index All groups (Hobart) from the date of this Submission to Planning Authority Notice until the date it is paid to TasWater.

DEVELOPMENT ASSESSMENT FEES

18. The applicant or landowner as the case may be, must pay a development assessment fee of $403.51 to TasWater, as approved by the Economic Regulator and the fees will be indexed, until the date paid to TasWater.

    The payment is required within 30 days of the issue of an invoice by TasWater.

Advice

General

For information on TasWater development standards, please visit
https://www.taswater.com.au/building-and-development/technical-standards
For application forms please visit
https://www.taswater.com.au/building-and-development/development-application-form

Important Notice Regarding Plumbing Plans and Associated Costs

The SPAN includes references to documents submitted as part of the application. These plans are acceptable for planning purposes only and are subject to further detailed assessment and review during the next stage of the development proposal.
TasWater's assessment staff will ensure that the design contains sufficient detail to assess compliance with relevant codes and regulations. Additionally, the plans must be clear enough for a TasWater contractor to carry out any water or sewerage-related work.
Depending on the nature of the project, your application may require Building and/or Plumbing permits or could be exempt from these requirements. Regardless, TasWater's assessment process and associated time are recoverable through an assessment fee.

Please be aware that your consultant may need to make revisions to their documentation to ensure the details are fit for construction. Any costs associated with updating these plans should be discussed directly with your consultant.

Developer Charges
For information on Developer Charges please visit the following webpage - https://www.taswater.com.au/building-and-development/developer-charges

Service Locations
Please note that the developer is responsible for arranging to locate the existing TasWater infrastructure and clearly showing it on the drawings. Existing TasWater infrastructure may be located by a surveyor and/or a private contractor engaged at the developers cost to locate the infrastructure.

a. A permit is required to work within TasWater's easements or in the vicinity of its infrastructure. Further information can be obtained from TasWater.
b. TasWater has listed a number of service providers who can provide asset detection and location services should you require it. Visit https://www.taswater.com.au/building-and-development/service-locations for a list of companies.
c. Sewer drainage plans or Inspection Openings (IO) for residential properties are available from your local council.

Declaration

The drawings/documents and conditions stated above constitute TasWater's Submission to Planning Authority Notice.

Request for Additional Information

For Planning Authority Notice

Application details

Council Planning Permit No.	PLN-25-0055
Application date	6/05/2025
TasWater Reference No.	TWDA 2025/00466-NMC
Date of response	12/05/2025
TasWater Contact	Shaun Verdouw
Phone No.	

Response issued to

Council name	NORTHERN MIDLANDS COUNCIL
Contact details	Planning@nmc.tas.gov.au

Development details

Address	20 UNION ST, LONGFORD
Property ID (PID)	6737345
Description of development	New Ambulance Station

Additional information required

Additional information is required to process your request. To enable assessment to continue please submit the following:

1. To allow TasWater to determine potential hydraulic service capacity limitations, please provide the following:
    a. The calculation of equivalent tenements for the development.
    The document(s) submitted should include the relevant calculations for the proposal as determined from Appendix B of the TasWater Supplement to WSA 02-2014-3.1 WSAA Gravity Sewerage Code of Australia.

2. Please provide a concept servicing plan for water & sewer services which shows the following:
    a. The exact location and size of the existing property water & sewer connection(s).
    b. Indicative location of sewer main extensions required to service the development.
    c. Indicative location of proposed TasWater easements in accordance with the relevant TasWater supplement (if applicable)
    d. The required location and size of property water & sewer connection(s) accurately dimensioned relative to the existing boundaries noting that:
        i. One sewer and one water property service connection must be provided to each lot.

Tasmanian Water & Sewerage Corporation Pty Ltd
GPO Box 1393 Hobart, TAS 7001
development@taswater.com.au
ABN: 47 162 220 653

ii. The property water service for each lot must be sized appropriately and located just inside the property boundary at the road frontage in accordance with the standard property connection details contained in TasWater's Water Metering Guidelines.
iii. The sewer property service connections for each lot must be sized appropriately and must be located at the low point of the lot just inside the property boundary.
iv. Redundant connections must be shown to be cut and sealed.

3. ***If the proposed sewer main needs to cross privately owned land***
It is noted that the proposed development **MAY** require works to be carried out on land that does not currently form part of the application (relevant land). In accordance with section 52 (1)(a) of the Land Use Planning and Approvals Act 1993 where the land is not owned or administered by the Crown or Council, a declaration that the applicant has notified the owner of that land of the intention to make the application for planning approval must be included in that application.
IF THIS IS THE CASE, please provide a copy of the above-mentioned declaration as well as copies of the full Certificate(s) of Title (Folio Plan, Folio Text, Schedule of Easements and Council Certificate Page, note that sometimes a Schedule or Council Certificate Page may not be available – so omit where not available) for the relevant adjoining land.
Alternatively, please provide confirmation that the infrastructure works that are to be carried out on the relevant land are exempt from requiring approval under the planning scheme and the reasons for it.
Please note that any planning approval that is obtained does not authorise construction of any infrastructure works on the relevant land, and where the infrastructure is to be transferred to TasWater an easement will be required for the protection of that infrastructure prior to completion of the project.

4. Please note that you have provided 2 different versions of the plans, that are flipped. 1 dated 31/03/2025, and 1 dated 11/04/2025. Please confirm which version is correct.

Advice

Service Locations

Please note that the developer is responsible for arranging to locate the existing TasWater infrastructure and clearly showing it on the drawings. Existing TasWater infrastructure may be located by a surveyor and/or a private contractor engaged at the developers cost to locate the infrastructure.

- A permit is required to work within TasWater's easements or in the vicinity of its infrastructure. Further information can be obtained from TasWater
- TasWater has listed a number of service providers who can provide asset detection and location services should you require it. Visit https://www.taswater.com.au/building-and-development/service-locations for a list of companies
- Sewer drainage plans or Inspection Openings (IO) for residential properties are available from your local council.

To view our assets, all you need to do is follow these steps:

1. Open up webpage - http://maps.thelist.tas.gov.au/listmap/app/list/map
2. Click 'Layers'
3. Click 'Add Layer'

4. Scroll down to 'Infrastructure and Utilities' in the Manage Layers window, then add the appropriate layers.
5. Search for property
6. Click on the asset to reveal its properties

From: Council Referrals <Council.Referrals@tasnetworks.com.au>
Sent: Tuesday, 27 May 2025 9:20 AM
To: John Padas; NMC Planning
Subject: RE: (ECM:1429464) RFI - RE: Referral_-_TasNetworks PLN25-0055 20 Union St Longford - CN25-104711

Categories: ECM
DocumentSetId: 1429464
DocumentVersion: 1

Hi John,

Thank you for providing the drawing and confirming the distance of 208mm off the edge of driveway and pole 248964 will be maintained.

@NMC Planning,

Based on the information provided on the drawing on the email dated 25/05/2025, the development is not likely to adversely affect TasNetworks' operations.

It is recommended that the customer or their electrician submit an application via our website portal found here https://www.tasnetworks.com.au/Connections/Connections-Hub to establish an electricity supply connection to support this development.

Please note, the reduced gap between the proposed driveway and the pole is at the owner's risk and any requests to relocate the pole will be at the owner's cost. More information on relocating assets - https://www.tasnetworks.com.au/relocate-tasnetworks-asset

Kind Regards,
Shehan.

Shehan Mendis
Customer Relationship Specialist

1–7 Maria St, Lenah Valley 7008
PO Box 606, Moonah TAS 7009

www.tasnetworks.com.au

@TasNetworks

/TasNetworks



From: John Padas
Sent: Sunday, 25 May 2025 4:28 PM
To: NMC Planning <planning@nmc.tas.gov.au>
Cc: Council Referrals <Council.Referrals@tasnetworks.com.au>
Subject: RE: RFI - RE: Referral_-_TasNetworks PLN25-0055 20 Union St Longford - CN25-104711

WARNING: Do you know this sender?

It looks like you have not talked much with this sender, if at all. Be careful with this email plus requests for gift cards and consider reporting it via the "Report Suspicious" button to be extra safe!

Report Suspicious

Dear Council and Tas Networks,

Further to the matter of the power pole as described in the emails below, please find attached a revised site plan to show that this will be kept at a minimum of 200mm away from the edge of the driveway (including the metal stake). Unfortunately it will not be possible to observe a two-metre offset as suggested below for best practice between the pole and the driveway as there are many factors that have contributed to this layout, including driveway gradients to the raised station floor level, which have in turn informed building setbacks, etc.

We trust that the above and attached information is satisfactory for your requirements.

Kind Regards,

John Padas
ARCHADIA

ARCHADIA
ARCHITECTURE

From: Council Referrals <Council.Referrals@tasnetworks.com.au>
Sent: Friday, 23 May 2025 3:57 PM
To: John Padas

Cc: NMC Planning <planning@nmc.tas.gov.au>
Subject: RE: RFI - RE: Referral_-_TasNetworks PLN25-0055 20 Union St Longford - CN25-104711

Hi John,

Thanks for providing the information regarding the distance between the proposed driveway and pole 248964 .

Please note, in order to assess a pole base for structural soundness and test for and treat decay, our asset inspectors are required to dig below ground level. To do so, a minimum horizontal clearance of 200mm from the vertical pole face is required. I have attached a screenshot of the power pole from Google Streetview. As for this pole, it would be a minimum clearance of 200mm from the edge of the metal pole stake (highlighted in yellow) which would need to be maintained. Could you please confirm this minimum clearance would be maintained and provide this on a plan?

If impacted, the pole will need to be relocated to support this development. More information on relocating assets - https://www.tasnetworks.com.au/relocate-tasnetworks-asset

TasNetworks generally try to maintain a 2m offset from driveways and new power poles. The reduced gap between the proposed driveway and the pole is at the owner's risk and any requests to relocate the pole will be at the owner's cost.

It is recommended that the customer or their electrician submit an application via our website portal found here https://www.tasnetworks.com.au/Connections/Connections-Hub to establish an electricity supply connection to support this development.



Best Regards,
Shehan.

Shehan Mendis
Customer Relationship Specialist

1–7 Maria St, Lenah Valley 7008
PO Box 606, Moonah TAS 7009

www.tasnetworks.com.au

@TasNetworks [twitter.com]

/TasNetworks [facebook.com]

From: John Padas
Sent: Tuesday, 20 May 2025 9:32 PM
To: Council Referrals <Council.Referrals@tasnetworks.com.au>
Cc: NMC Planning <planning@nmc.tas.gov.au>
Subject: RE: RFI - RE: Referral_-_TasNetworks PLN25-0055 20 Union St Longford - CN25-104711

WARNING: Do you know this sender?

It looks like you have not talked much with this sender, if at all. Be careful with this email plus requests for gift cards and consider reporting it via the "Report Suspicious" button to be extra safe!

Report Suspicious

Dear Tas Networks,

I have asked the surveyor to confirm the location of the pole on the site and confirm that the easterly side edge of the concrete driveway is 420mm from the centre of the power pole 248964. I trust that this information is helpful – please let me know if there are any issues.

Kind Regards,

John Padas
ARCHADIA

From: Council Referrals <Council.Referrals@tasnetworks.com.au>
Sent: Monday, 19 May 2025 2:14 PM
To: NMC Planning <planning@nmc.tas.gov.au>

Cc: John Padas
Subject: RFI - RE: Referral_-_TasNetworks PLN25-0055 20 Union St Longford - CN25-104711

Hi Sylvia,

Thank you for your email on 06/05/2025 referring to the above development.

As per screenshot from our spatial database below, TasNetworks has a low voltage line on Union St, Longford on the side of the property indicated by the dark blue solid line. The proposed driveway from Union St is likely in close proximity to pole 248964.

Could we request the proponent to provide the distance between the power pole and the proposed driveway on Union St for this to be reviewed please?

I have CC'd the applicant for their information.

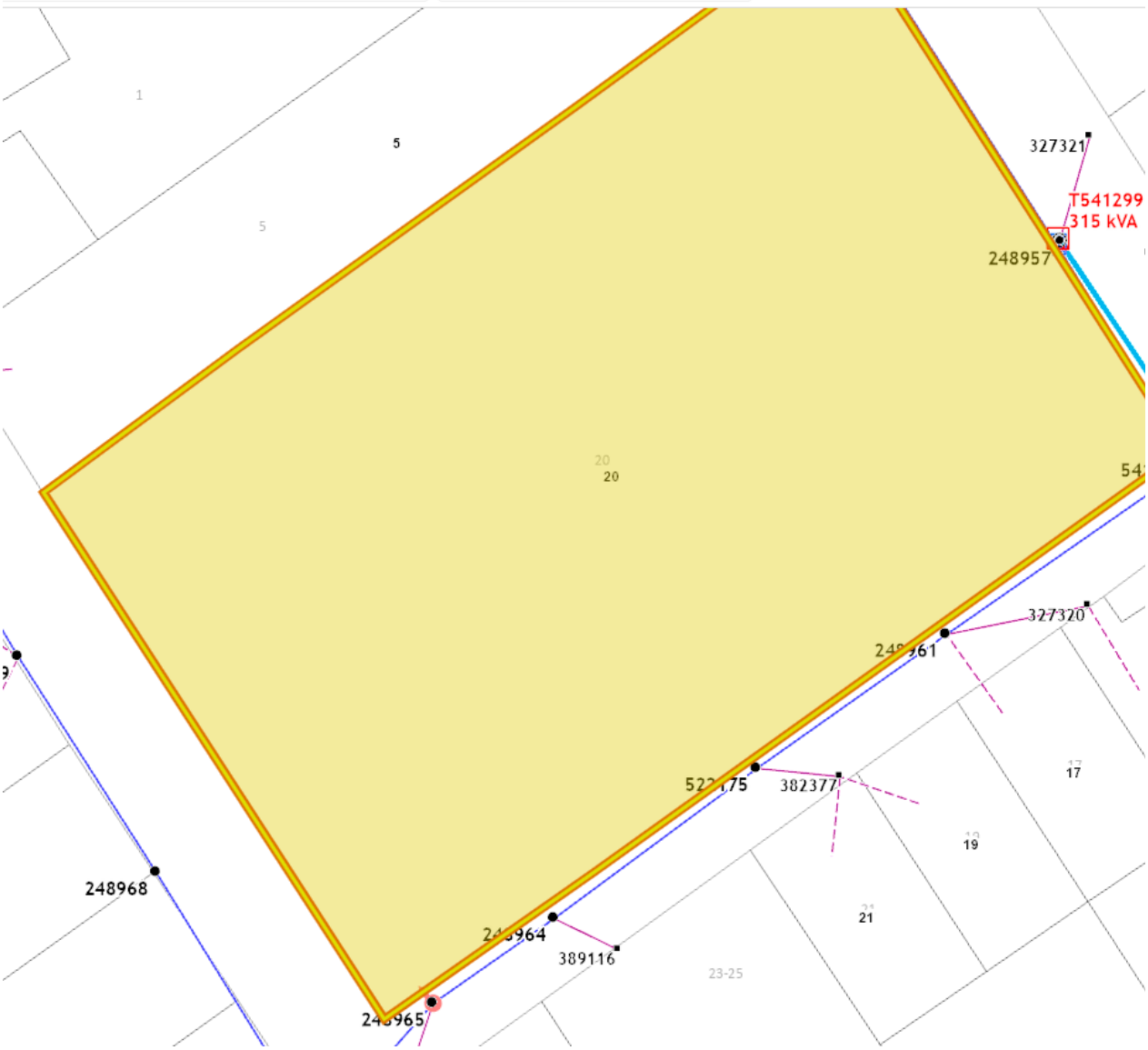

Thank you.

Kind Regards,
Shehan.

Shehan Mendis
Customer Relationship Specialist

1–7 Maria St, Lenah Valley 7008
PO Box 606, Moonah TAS 7009

www.tasnetworks.com.au

@TasNetworks [twitter.com]

/TasNetworks [facebook.com]

TasNetworks | Powering a Bright Future

From: NMC Planning <planning@nmc.tas.gov.au>
Sent: Tuesday, 6 May 2025 2:23 PM
To: Council Referrals <Council.Referrals@tasnetworks.com.au>
Subject: Referral_-_TasNetworks PLN25-0055 20 Union St Longford - CN25-104711

WARNING: This Message Is From an External Sender

Emails from this user are not from within TasNetworks. Be careful with links and requests for information or action and consider reporting it via the "Report Suspicious" button to be extra safe!

Report Suspicious

Good Afternoon

Please see referral for your action.

Kind regards

Sylvia Goldspink

| Northern Midlands Council
Council Office, 13 Smith Street (PO Box 156), Longford Tasmania 7301
T: (03) 6397 7303 | F: (03) 6397 7331
E: | W: www.northernmidlands.tas.gov.au
[northernmidlands.tas.gov.au]

NORTHERN MIDLANDS COUNCIL

Tasmania's Historic Heart

employer of choice

Northern Midlands Council Confidentiality Notice and Disclaimer:

The information in this transmission, including attachments, may be confidential (and/or protected by legal professional privilege), and is intended only for the person or persons to whom it is addressed. If you are not such a person, you are warned that any disclosure, copying or dissemination of the information is unauthorised. If you have received the transmission in error, please advise this office by return email and delete all copies of the transmission, and any attachments, from your records. No liability is accepted for

unauthorised use of the information contained in this transmission. Any content of this message and its attachments that does not relate to the official business of the Northern Midlands Council must be taken not to have been sent or endorsed by it or its officers unless expressly stated to the contrary. No warranty is made that the email or attachment(s) are free from computer viruses or other defects.

The information contained in this message, and any attachments, may include confidential or privileged information and is intended solely for the intended recipient(s). If you are not an intended recipient of this message, you may not copy or deliver the contents of this message or its attachments to anyone. If you have received this message in error, please notify me immediately by return email or by the telephone number listed above and destroy the original message. This organisation uses third party virus checking software and will not be held responsible for the inability of third party software packages to detect or prevent the propagation of any virus how so ever generated.

General Meeting Agenda

Friday 25 July 2025

Commencing at 12:30 pm

Boathouse Centre, 55a Lindsay Street, Invermay, Launceston

326 Macquarie Street, GPO Box 1521, Hobart, Tas 7000

Phone: (03) 6146 3740

Email: admin@lgat.tas.gov.au

Home Page: http://www.lgat.tas.gov.au

Procedural Matters
Rules regarding conduct of meetings

13. Who may attend a meeting of the Association

(a) Subject to Rule 13(f), each Member shall be entitled to send a Voting Representative to any Meeting of the Association, such Voting Representative exercising the number of votes determined according to Rule 16(a).

(b) In addition to the requirements set out in Rule 13(f), after each ordinary Council Election, the Chief Executive Officer shall request each Member to advise the name of its Voting Representative and the proxy for the Voting Representative for Meetings of the Association until the next ordinary Council Elections.

(c) Subject to Rule 13(f), Members may change their Voting Representative or proxy at any time by advising the Chief Executive Officer in writing of the Voting Representative prior to that representative taking his or her position at a Meeting of the Association.

(d) A list of Voting Representatives will be made available at the commencement of any Meeting of the Association.

(e) Members may send other elected members or Council officers as observers to any Meeting of the Association.

(f) Each Member must provide the Association with written notice of the details of the Voting Representative who was by a resolution of the Member lawfully appointed as the Voting Representative of the Member at a Meeting of the Association.

14. Proxies at meetings

(a) Up to 1 hour prior to any Meeting of the Association, a Member may appoint another Member as its proxy.

(b) The form of the proxy is to be provided by the Chief Executive Officer and is to be signed by either the Mayor or General Manager of the Council appointing the proxy.

(c) The Chair of the meeting is not entitled to inquire as to whether the proxy has cast any vote in accordance with the wishes of the Member appointing the proxy.

(d) Proxies count for the purposes of voting and quorum at any meeting.

15. Quorum at meetings

(a) At any Meeting of the Association, a majority of the Member Councils shall constitute a quorum.

(b) If a quorum is not present within one hour after the time appointed for the commencement of a Meeting of the Association, the meeting is to be adjourned to a time and date specified by the Chair.

16. Voting at meetings

(a) Voting at any Meeting of the Association shall be upon the basis of each Voting Representative being provided with, immediately prior to the meeting, an electronic voting button or placard which is to be used for the purpose of voting at the meeting. The placard will be coloured according voting entitlement and the voting buttons will be coded according to voting entitlement:

Population of the Council Area	Number of votes entitled to be exercised by the voting delegate	Colour placard to be raised by the voting delegate when voting
Under 10,000	1	Red
10,000 – 19,999	2	White
20,000 – 39,999	3	Blue
40,000 and above	4	Green

(b) Electronic voting buttons will be the first choice for voting on all decisions, with placards only to be used if the technology fails.

(c) Voting buttons allow councils to vote for or against a motion or formally abstain from voting. An abstain is not to be taken as a negative vote.

(d) The Chair of the meeting shall be entitled to rely upon the electronic vote or the raising of a coloured placard as the recording of the vote for the Member and as evidence of the number of votes being cast.

(e) Except as provided in sub-rule (f), each question, matter or resolution shall be decided by a majority of the votes for a motion. If there is an equal number of votes upon any question, it shall be declared not carried.

(f)

(i) When a vote is being taken to amend a Policy of the Association, the resolution must be carried by a majority of the votes capable of being cast by Members present at the meeting.

(ii) When a vote is being taken for the Association to sign a protocol, memorandum of understanding or partnership agreement, the resolution must be carried by a majority of votes capable of being cast by Members and by a majority of Members, whether present at the meeting or not.

(iii) When a vote is being taken to amend these Rules of the Association, the resolution must be carried by at least two-thirds of the votes capable of being cast by Members, whether present at the meeting or not.

(g) A Voting Representative or his or her proxy in the name of the Member is entitled to vote on any matter considered at a Meeting of the Association.

Table of Contents

1. Governance 5

Acknowledgement of country 5

Welcome and apologies 5

1.1. Confirmation of minutes * 5

1.2. Business arising * 5

1.3. Confirmation of agenda 6

1.4. Follow up of motions * 6

1.5. President's Report 6

1.6. Chief Executive Officers Report 9

1.7. Annual Plan update * 11

1.8. Council roundup 11

2. Items for decision 12

2.1. Motion – Better Active Transport Grant Program 12

2.2. Rating of new energy developments* 14

3. Items for discussion 16

4. Items for noting 16

4.1. Advocate 16

4.1.1. Local Government Reform 16

4.1.2. State Election priorities * 18

4.1.3. Planning 19

4.1.4. Government Business Enterprises and Rating Treatment * 22

4.1.5. Lift the Tone 24

4.1.6. Emergency management and recovery update 25

4.2. Member Services 26

4.2.1. Procurement update 26

4.2.2. Events and professional development overview 28

4.2.3. Learning and development framework 30

4.3. Sector Support 32

4.3.1. Safeguarding Children 32

4.3.2. Climate change 34

4.3.3. EPA Memorandum of Understanding Annual Plan 2025-26 * 35

4.3.4. Policy Update 36

4.3.5. Sector support update 38

5. Other business and close 40

5.1. Next meetings and close 40

*** Denotes Attachment**

General meeting schedule

12:00 pm	**Lunch on arrival**
12:30 pm	**General meeting commences** Boathouse Centre, 55a Lindsay Street, Invermay, Launceston
12:35 pm	**Speaker to be determined**
2:00 pm	**LGAT Annual General Meeting** The AGM will commence following the conclusion of the General Meeting

General Meeting

25 July 2025

1. Governance

Acknowledgement of country

We acknowledge the traditional custodians of this land Tasmania, the Palawa people, and recognise their continuing connection to the lands, skies, and water. We pay respect to the elders, past and present.

Welcome and apologies

1.1. Confirmation of minutes *

Decision sought

That the minutes of the meeting held on 2 April 2025, as circulated be confirmed.

Background

The Minutes of the General Meeting held on 2 April 2025, as circulated, are submitted for confirmation and are at **Attachment to Item 1.1**.

1.2. Business arising *

Decision sought

That members note the information.

Background

At **Attachment to Item 1.2** is a schedule of business considered at the previous meeting and its status.

1.3. Confirmation of agenda

Decision sought

That consideration be given to the agenda items and the order of business.

Background

Delegates will be invited to confirm the agenda for the meeting and the order of business.

1.4. Follow up of motions *

Decision sought

That members note the following report.

Background

A table detailing action taken to date in relation to motions passed at previous meetings is at **Attachment to Item 1.4.**

1.5. President's Report

Contact officer – Dion Lester, CEO

Decision sought

That members note the report on the President's activity from 14 March until 27 June 2025.

Meetings and events

- ALGA March, May and June Board Meetings
- ALGA National General Assembly
- April General Meeting
- May and June GMC meetings
- Mayors and Deputy Mayors' workshop
- Meeting with the Minister for Planning
- Red Tape Reduction Coordinator meeting
- President and Vice President meeting

Correspondence

- Letters to the Minister for Planning on Development Assessment Panels and planning reform.
- Letters of congratulations for successful Tasmania Labor Party candidates in the Federal election.

Media

LGAT News April 2025 and June 2025

Abuse towards elected representatives

- Articles
  - The Mercury, 16 March 2025
  - Government News, 18 March 2025

Lift the Tone (please note this includes media conducted by the President and Vice President)

- Media release
  - 3 April 2025
- Articles
  - Townsville Bulletin, 4 April 2025
  - The Examiner, 4 April 2025
  - The Chronicle, 4 April 2025
  - The Advertiser, 4 April 2025
  - NT News, 4 April 2025
  - Herald Sun, 4 April 2025
  - Gold Coast Bulletin, 4 April 2025
  - Geelong Advertiser, 4 April 2025
  - Daily Telegraph, 4 April 2025
  - Courier Mail, 4 April 2025
  - Cairns Post, 4 April 2025
  - The Mercury, 4 April 2025
  - Inside Local Government, 8 April 2025
  - Council Magazine, 9 April 2025
  - Government News, 17 April 2025
  - The Examiner, 30 April 2025
  - Hobart Observer, 9 May 2025
  - Glenorchy Gazette, 9 May 2025
  - Kingborough Chronicle, 13 May 2025
  - Eastern Shore Sun, 25 May 2025
- TV/Radio
  - ABC Hobart, 31 March 2025
  - Seven Nightly News, 3 April 2025
  - 10 News, 3 April 2025

- WIN News, 3 April 2025
- ABC Hobart, 3 April 2025
- Sea 101.7FM Burnie, 4 April 2025
- 7SD 95.7FM Launceston, 4 April 2025
- Sea 107.7FM Devonport, 4 April 2025
- 7AD 98.9FM Devonport, 4 April 2025
- 7BU 100.9 Burnie, 4 April 2025
- LAFM, 4 April 2025
- Chilli FM, 4 April 2025
- HOFM, 4 April 2025
- Ultra 106.5, 5 April 2025
- LAFM, 15 April 2025

Federal Election

- Radio
  - ABC Hobart, 31 March 2025
- Article
  - Government News, 12 May 2025

Proposed DAPs Bill

- Media release
  - 11 April 2025
- Article
  - Council Magazine, 24 April 2025

Crowther Statue Award Nomination

- Radio
  - ABC Hobart, 20 April 2025
- Articles
  - The Mercury, 20 April 2025

Council rates

- Radio
  - ABC Hobart, 19 May 2025
  - ABC Hobart, 19 June 2025 (*Note: Vice President on air*)

LGAT State Election Priorities

- Media Releases
  - Heavy Vehicle Motor Tax Liberal Commitment, 24 June 2025
  - Response to Liberal Planning Announcement, 25 June 2025
- Articles
  - The Advocate, 26 June 2025

1.6. Chief Executive Officers Report

Contact officer – Dion Lester, CEO

Decision sought **That members note the report on the CEOs activity from 14 March until 27 June 2025.**

Advocacy

In the period since my last report our policy and advocacy activity has been focussed on the local government reform program (comprising the Targeted Amendments to the *Local Government Act 1993*, remaking of the Local Government Regulations and Electoral Bill Discussion Paper), the development of a draft consultation and engagement partnership agreement with the State Government, our State Budget Priority Statement 2025-26, the 20-year Preventative Health Strategy and supporting the introduction of the container refund scheme. A number of submissions supporting this advocacy can be found on our website[1].

The announcement of the state budget came with some short-lived good news for our sector. Through our advocacy, we secured $300,000 to develop a Planning and Development Capability Program – called the Planning Pool, an additional $177,000 to continue our important work on safeguarding children and young people and continuation of funding for the local government health and wellbeing network at least util the release of Tasmania's 20 year Preventative Health Strategy.

Now with the State Election being called, this funding is not guaranteed. As you would expect, our efforts quickly shifted to the development and implementation of an election campaign.

The other significant activities included:

- A submission on the updated Development Assessment Panel Bill alongside significant direct advocacy to the government.
- Working with the Department of State Growth on the final scoping of a project for a statewide skills development program for planning for population change. This program was part of our 2025–26 State Budget Priority Statement[2] and will involve workshops, training and resources to support councils to understand and then apply local population data and demographic changes.

Member Services

Across our Member Services, there has been ongoing support of councils to access the new civil works panels, alongside a number of events and workshops that included a General Manager/CEO workshop, Mayors Community of Practice follow-up session on psychological safety and a Mayors and Deputy Mayors' workshop. A full report on our events and workshops are provided later in this agenda.

[1] https://www.lgat.tas.gov.au/lgat-advocacy/reports-and-submissions
[2] https://www.lgat.tas.gov.au/__data/assets/pdf_file/0016/1734100/LGAT-Budget-Priority-Statement-2025-26.pdf

Sector Support

April saw the successful launch of our Lift the Tone campaign; a full report is provided later in this agenda.

Since my past report, there has been significant work in transitioning the Learning and Development Framework across to LGAT from the Office of Local Government. At this stage, the implementation of a new Learning Management System remains as the one outstanding task for this to be completed. LGAT's future efforts will move to recruiting a GMC subcommittee and a Learning and Development Coordinator to oversee and develop (respectively) the further course content. A full report is provided at **Item 4.2.3** in this agenda.

Governance and Operations

In the current period, the priority has been on the induction support for a number of replacement and new positions and the scoping of the new Learning and Development Coordinator position following the transition of the framework to LGAT.

Media

The following summarises the traditional media the LGAT CEO or Secretariat[3] has secured during the reporting period. This forms a small component of our overall communications activities, with social media being an important part. A report on our social media activity is available on request.

Lift the Tone

- Opinion editorial
  - The Mercury, 10 April 2025
- Articles
  - The Advocate, 25 March 2025
  - The Advocate, 4 April 2025
  - The Advocate, 12 April 2025
  - The Examiner, 30 April 2025
- Radio
  - ABC Northern Tasmania, 3 April 2025
  - ABC Hobart, 3 April 2025

Line Marking Funding

- Article
  - The Advocate, 17 April 2025

Federal Government Election

- Media enquiry
  - Government News, 6 May 2025

[3] LGAT President media is listed separately in the President's Report.

Container refund scheme

- Opinion editorial
  - The Mercury, 30 May 2025

Councillor allowances

- Media enquiry
  - The Examiner, 3 June 2025
- Article
  - Government News, 12 June 2025

Council rates

- Opinion editorial
  - The Mercury, 12 June 2025

LGAT Election Priorities

- Opinion editorial
  - Planning priorities, The Mercury, 26 June 2025
  - Article
    - The Examiner, 26 June 2025

1.7. Annual Plan update *

Decision sought

That members note the report against the Annual Plan.

Background

An **Attachment to Item 1.7** is a copy of the LGAT Annual Plan and progress to date.

1.8. Council roundup

Decision sought

That members note there will be a council round up by Northern Midlands Council.

Background

The session also allows time for questions and provides an opportunity to briefly share and highlight problems or opportunities facing councils.

2. Items for decision

2.1. Motion – Better Active Transport Grant Program

Council – City of Hobart

Decision sought

That the Local Government Association of Tasmania lobby the Tasmanian Government to commit to:

1. **reinstate the Tasmanian Government's Better Active Transport Grant Program; and**
2. **increase the ongoing annual funding of the Better Active Transport Grant Program to not less than 1 per cent of the annual roads budget.**

Background

Recently the State Government advised that there are no plans for further rounds of the Tasmanian Better Active Transport Grant program, which was a multi-year initiative designed to enhance walking, cycling, and other forms of active mobility across the state.

The Better Active Transport Program was split into two grant streams:

Statewide Program - Open to all Tasmanian municipal councils; and

Greater Hobart Program - Focused on projects within the Hobart metropolitan area.

The aim of the program was to improve active transport (walking, wheeling, riding) safety and infrastructure, support councils in designing and delivering active transport solutions, increase accessibility, safety, and ease of use for active transport users and ultimately encourage healthier, more sustainable travel habits. The program ceased as at 30 June 2025.

According to the Tasmanian Government, since 2015, they have committed $17.5 million to active transport infrastructure (Grant programs – Transport Services)[4]. Interestingly, the Tasmanian Government has committed approximately $1.6 billion over the forward estimates (2025–2029) for roads and bridges (Building better roads and bridges across Tasmania: now, and for the future | Premier of Tasmania)[5].

One per cent of $1.6 billion is $16 million or $4 million per year. This modest amount ongoing would provide certainty for councils across Hobart and Tasmania as a whole to commit to planning, designing and constructing this important infrastructure.

It is proposed that a similar, collegial approach to the funding application process be undertaken to the program by region. For example, the Greater Hobart program sought to fund projects by priority across Greater Hobart in order to deliver on the Greater Hobart Cycling Plan. This was endorsed by the Greater Hobart Councils and the Tasmanian Government.

[4] https://www.transport.tas.gov.au/active-transport/projects_and_programs
[5] https://www.premier.tas.gov.au/budget-2025/budget-releases/building-better-roads-and-bridges-across-tasmania-now,-and-for-the-future

The Better Active Transport Grant Program provides an important funding opportunity for local governments to partner with the State Government to develop, and construct upgraded, new or extended active transport infrastructure at priority locations and its de-funding is considered to be a significant loss for the State.

LGAT Comment

In December 2018, the following motion was carried:

> *That LGAT lobby the State Government for the establishment of a recurrent fund to support the provision of separated bicycle infrastructure for local and state roads.*

At the time we weren't successful in shifting the funding profile. The actions we took included advocating directly to the Minister and included the request for a greater State Government investment on locally based initiatives, such as public transport and active transport, in our State Budget priorities, election documents, and other direct advocacy. This included a specific ask for $1 million per year over four years for active transport.

We also participated in a joint project, Health by Stealth, with the Menzies Institute, Metro and the Department of Health looking at the health benefits in Tasmania associated with public and active transport and what incentives work for increasing participation.

Advocacy towards reinstating the Tasmanian Government's Better Active Transport Grant program is included in our recently released 2025 State Election Priority Statement:

> ***A fairer share for local roads***
>
> *To support our communities having access to safe, reliable local roads and being provided with healthier, more sustainable travel options, we're calling for a commitment to:*
>
> - *A fair distribution of the Heavy Vehicle Motor Tax revenue, which means distributing that revenue among all road managers on the same basis it is charged – on-road use.*
> - *Reinvest speeding fine revenue directly into local road safety by supporting road network safety plans and reinstating the Better Active Transport Grants Program.*

2.2. Rating of new energy developments*

Contact Officer – Ben Morris, Policy Director

Decision sought

That members:

- **endorse the position that, where relevant, Tasmanian councils differentially rate renewable energy facilities in alignment with the Victorian Payment in Lieu of Rates (PiLoR) charges, or less**
- **note LGAT will undertake the work outlined in the attached paper to support this.**

Background

At the March 2024 General Meeting, the following resolution was made:

> *That LGAT lobby the State Government:*
>
> 1. *To amend legislation to include electricity generation and storage plant and equipment in capital valuation (as occurs in Victoria) and to allow energy sector developments to make appropriate payments in lieu of rates under a regulated formula subject to indexation consisting of a fixed payment per site and a variable payment based on installed capacity.*
> 2. *That applicable developments subject to the rating policy amendments will include all current electricity generation and storage developments under existing technologies, as well as future generation and storage developments under existing and new technologies.*
> 3. *Where a Council's infrastructure and service provision is impacted by energy sector developments, consider the means for appropriate compensation via similar payment arrangements to ensure ratepayers are not financially impacted.*

Prior to this the Future of Local Government Review (FoLGR) final report (October 2023) recommended (#17) that:

> *The Tasmanian Government should further investigate and consider introducing an alternative framework for councils to raise revenue from major commercial operations in their local government areas, where rates based on the improved value of land are not an efficient, effective, or equitable form of taxation.*

In its response to the FoLGR final recommendations, the State Government 'partially supported' this recommendation, noting that:

> *The Government will consult on potential frameworks to help benefit councils that assist major operations in their local government areas.*

Separately, and in response to LGAT advocacy, the Office of the Valuer General has created new Valuation Property Classification Codes for Electricity Generation, Electricity Storage and Electricity Transmission that will allow for the specific valuation and then, potentially, rating of these properties.

The Valuer General wrote to relevant councils in January 2025 providing this advice and a list of relevant properties in the municipality, asking for their confirmation.

Beyond the Valuer-General's activities, the State Government has taken limited action on its FoLGR commitment. We understand that one of the models under consideration is the Victorian Payment in Lieu of Rates (PiLoR) approach[6] where generators pay a rate based on their electricity generation. We have been advocating to the Office of Local Government and to Renewables Climate Change and Future Industries Tasmania (ReCFIT), which is the agency responsible for the action. We understand that their next steps were discussed before the state election, but no outward progress has been made.

In the interim, we developed a position and process for councils to make use of the new property valuation codes to rate renewable energy facilities. The paper proposes a rate equivalent to PiLoR to apply as a differential rate. This equivalency is intended to avoid any criticisms that councils are creating barriers to investment, rather providing a level playing field with Victoria and potentially with South Australia. In Queensland there is a wide range of rates levied by councils, in comparison a PiLoR rate is expected to be at the lower end of this range. We also understand that Hydro Tasmania's rate equivalent payment is set at a similar level to PiLoR.

The draft document was circulated to councils in April, with feedback concluding in late May. Five councils responded to the draft, with all councils generally supporting the approach for councils to rate renewable energy generators. One council did not support a single statewide rate in the dollar, or a PiLoR approach, noting that it should be up to individual councils to determine their rating, as they do for other land uses. We note that councils under LGAT's proposed approach would still be able to determine to apply a different rate, and under the Victorian PiLoR councils can also negotiate a different rate. Where a council chooses to charge a higher rate, it may need to demonstrate why the equivalency should not apply.

The final proposed position paper is at **Attachment 2.2** for endorsement. Pending member endorsement, LGAT will follow the paper's approach and report back at the November 2025 General Meeting.

Budget Impact

Being undertaken within current resources.

Current Policy

Strategic Plan

- Advocate

2025 Focus Areas

Advocate

Infrastructure

[6] More details available at: https://www.energy.vic.gov.au/renewable-energy/payment-in-lieu-of-rates-for-electricity-generators

3. Items for discussion

There are no items for discussion.

4. Items for noting

4.1. Advocate

Local government reform and sector sustainability
Land use planning
Housing
Infrastructure
Emergency Management

4.1.1. Local Government Reform

Decision sought

That members note the update on local government reform.

Background

Prior to the state election being called, the State Government was currently working through its Local Government Priority Reform Program, developed in response to the Future of Local Government Review. In the first six months of this year, this has involved the release of discussion papers on Targeted Amendments to the Local Government Act, Remaking of the Local Government Regulations and a new Electoral Bill. Each of these is discussed briefly below.

Targeted amendments to the Local Government Act

Local government was supportive of the broad direction of reforms contained in this package, as they are a combination of high-priority recommendations from the Future of Local Government Review and direct responses to sectoral concerns. However, there was a substantial amount of detail to be resolved, and we requested that appropriate consultation continues through the next stages of the legislation development.

Our submission emphasised that the endorsed reforms from the Future of Local Government Review related to revenue, which have seen no progress to date, be expedited by the Government as a priority. Specifically, strategic reform priority 4, Supporting council sustainability, which included the following actions:

- Investigate and consider introducing a marginal cost-based integrated developer charging regime.
- Reviewing the total amount of Heavy Vehicle Motor Tax Revenue made available to councils[7].
- Exploring an alternative revenue framework for major operations.

[7] The establishment of an Infrastructure charging framework and a fair share of the Heavy Vehicle Motor Tax were both requests as part of our State election Priority Statement.

Remaking the local government regulations

Local government was also supportive of the broad direction of reforms contained in this package. While the changes proposed to the current regulations are modest, they were predominantly in response to sector resolutions and/or concerns.

The one area where there was consistent negative feedback is the proposed change to Schedule 4 – Allowances for elected members, with an additional 3% suggested to account for changes to the superannuation guarantee. Our submission noted that the increase proposed did not recognise the contemporary expectations or workload required of a councillor. Further, it does little to position the sector to attract a broad cross section of candidates in the 2026 local government elections. We noted that the Government had supported the Future of Local Government Review Final Report Recommendation 34 for a review into councillor numbers and allowances, with the timeframe involving "Interim review to be conducted in 2025, with broader review in 2027". Our submission requested that the review commence as a priority and include **both councillor numbers and allowance**. To support our submission, we have been advocating directly to the Office of Local Government and the Minister's office.

Local government electoral bill

Local government was broadly supportive of the proposed local government election reforms. The sector welcomed a new electoral framework that is more responsive to today's challenges.

Councils recognise the need to change how local government elections are conducted, given the current and ongoing changes to the postal system. The overall view of the sector was that a hybrid approach is the best model at this time. There was limited support for in-person only voting.

Councils did not support changes to the current direct election of the Deputy Mayor. Councils noted that the current system works well and removing this may reduce the community's democratic voice.

Budget Impact

Being undertaken within current resources.

Current Policy

Strategic Plan

- Advocate

2025 Focus Areas

Advocate

Local government reform and sector sustainability

4.1.2. State Election priorities *

Dion Lester, Chief Executive Officer

Decision sought
That members note the update on LGAT's state election priorities and advocacy.

Background

A state election has been called for 19 July. This comes a little over 14 months after the last state election, where our priorities were:

- A State and local government charter
- A workforce development program across local government
- Development of an infrastructure contributions framework for Tasmania
- A fair share of the heavy vehicle motor tax
- A shift in focus from the Government to strategic planning from just regulation
- Amendments to the *Local Government Act* to ensure independent living units pay rates.

With the surprise nature of this election, the short timeframe, current political context and the difficult fiscal environment that will be faced by the incoming Government, we have drawn on existing well-established policy priorities and have not sought new resources or spending.

It is also worth noting that housing remains a significant challenge for our state and will feature in policy announcements, and that the current local government reform program is well supported across our sector.

Below is an outline of the 'headline' priorities for our election campaign. Our full state election priority statement is in included as at **Attachment 4.1.2**.

Fix the foundations to support the system

Ensure effective and up-to-date strategic policy guidance by completing the Tasmanian Planning Policies, and investing in updated regional land use strategies

Infrastructure contributions and applicant support

Establish an infrastructure contributions framework to fairly distribute costs between developers and prepare a comprehensive suite of planning resources to support applicants.

Fair distribution of the Heavy Vehicle Motor Tax

Support local road funding by distributing Heavy Vehicle Motor Tax revenue equitably among all road managers on the same basis it is charged – on-road use.

Invest speeding fine revenue into supporting safer local roads

Reinvest speeding fine revenue directly into local road safety for drivers and vulnerable road users.

Shape the future of local government

Following the investment in the Future of Local Government Review and the initial work across the priority reform areas, we request that this reform agenda continue, irrespective of who forms the government.

Ensure rate concessions are targeted at those in genuine need

Amend the *Local Government Act* so that, like those living in their family home, a remission in rates only applies to residents in ILUs who require charitable assistance.

These priorities have been provided to each major party and key independents, with follow-up discussions and meetings. In addition, a six week social media and earned media campaign is being rolled out.

In addition to these 'headline priorities', there are a number of tactical activities occurring, which include being responsive to positive policy announcements and undertaking discrete advocacy on areas of risk.

Budget Impact

Being undertaken within current resources.

Current Policy

Strategic Plan

- Advocate

2025 Focus Areas

Advocate

- Local government reform and sector sustainability
- Land use planning
- Housing
- Infrastructure

4.1.3. Planning

Contact Officer – Jon Stanger, Senior Policy Advisor

Decision sought

That members note the report on planning policy issues.

Planning Pool

LGAT secured a significant win from our 2025-26 State Budget submission, with our Planning and Development Capability program (Planning Pool) securing a commitment of $300,000 over two years. The program will establish a central pool of planning technical staff to support councils in development readiness.

However, with a state election on July 19, the funding is no longer guaranteed. Once the election result is known, we will advocate for this important project to be supported.

Regional Land Use Strategies

The Southern Tasmania Regional Land Use Strategy 2010–2035 was amended on 19 May 2025 to incorporate a revised Urban Growth Boundary as declared by the Minister for Planning. The Minister has also authorised the Tasmanian Planning Commission to make amendments to Guideline No. 1, issued under Section 8A of the *Land Use Planning and Approvals Act 1993* (LUPAA) relating to the application of planning zones and codes. This is to enable a staged release of residential land across Greater Hobart through the rezoning process.

The State Planning Office (SPO) expects draft Regional Land Use Strategies (RLUS) for all three regions to be released for comment by the end of 2025, and the final strategies to be complete by mid-2026. A RLUS Review Coordinator is being recruited by the SPO to link the reviews to state directions and coordinate state responses from departments and authorities.

Tasmanian Planning Policies (TPPs)

The Tasmanian Planning Commission has provided their TPP report to the Minister for Planning, who must decide to make, modify or refuse the draft TPPs. This has been deferred due to the state election, and it will be a decision for the Minister for Planning following the election. LGAT advocacy is focused on securing a decision on making of the TPPs as soon as possible to support and inform the development of RLUS.

Medium Density Design Guidelines

The Medium Density Design Guidelines have been developed and published as a non-statutory, advisory document to support the delivery of medium-density housing in Tasmania. The development of Medium Density Design Guidelines came out of the 30-Year Greater Hobart Plan and was included in the State Planning Provisions (SPP) review.

Development Assessment Panels (DAPs)

Following the Legislative Council's rejection of the DAP Bill in late November 2024, the government released an updated Bill in 2025 for another round of consultation. While there were some minor improvements, this version was also rejected by local government. DAPs remain a distraction from the critical planning reforms demanded by the sector, including completing the Tasmanian Planning Policies and RLUS.

With the state election called for July 19, the DAP Bill 2025 would need to be reintroduced to a new Parliament to progress and LGAT advocacy will continue to call for a focus on our planning reform priorities.

AI in planning

The use of Artificial Intelligence (AI) can help to speed up and streamline planning processes, such as by:

- helping development proponents identify site-specific requirements
- providing pre-lodgment assessment of development assessments
- supporting council officers to identify non-complying elements in applications.

LGAT is currently investigating the opportunity for Tasmanian councils, with the aim of supporting statewide implementation of an AI solution with a focus on reducing the workload of planners, including supporting the pre-lodgement of applications and supporting council officers in their high-level assessment. One or two Tasmanian councils have developed their own solutions using generic platforms, such as ChatGPT. This early adopter experience will be useful in informing scalable solutions that can support the entire sector.

The Victorian and New South Wales governments have been through a preferred supplier process against the AI use cases identified above. We will draw on their work to identify a partner for Tasmania. We have already met with one of the NSW-preferred suppliers who has demonstrated their platform that converts a PDF of a development application to a 3D model and compares it against the planning scheme. It then produces a report for the proponent, or council, identifying the areas of compliance, non-compliance and areas that require more qualitative assessment.

This project will be progressed following the implementation of the new Learning Management System that will support the delivery Learning and Development Framework.

Budget Impact

Being undertaken within current resources.

Current Policy

Strategic Plan

- Advocate

2025 Focus Areas

Advocate
- Land use planning
- Housing
- Infrastructure

4.1.4. Government Business Enterprises and Rating Treatment *

Contact officer – Dion Lester, CEO

Decision sought

That members note the 2003 Statewide Partnership Agreement between the Tasmanian Government and councils on financial reform and discuss the sector resolution on the payment of Government Business Enterprises rates equivalents to local government.

Background

At the November 2024 General Meeting the following motion was supported:

> *That LGAT pursue with the Tasmanian Government the following:*
>
> - *Funds received by the State Government from Government Business Enterprise as Rate Equivalent payments be in the most part distributed to Local Government.*

There are a number of land types that receive rates exemptions, including, but not limited to reserves, roads, railway lines, land owned and occupied for charitable purposes etc.

Clause 87 (1)(c) outlines the relevant Government Business Enterprises that are subject to rates exemption, where a "rate equivalent payment" is made:

> *(c) land owned by the Hydro-Electric Corporation or land owned by a subsidiary, within the meaning of the Government Business Enterprises Act 1995[8] , of the Hydro-Electric Corporation on which assets or operations relating to electricity infrastructure, within the meaning of the Hydro-Electric Corporation Act 1995[9] , other than wind-power developments, are located.*

This rating treatment of State-owned land stems from the 2003 Statewide Partnership Agreement between the Tasmanian Government and councils on financial reform. The final agreement is included as an **Attachment 4.1.4** to this item.

The agreement sought to simplify and make more transparent financial relations between the two spheres of government; the agreed principles of the reform model were:

> **financial transparency** – the reforms should aim to improve the transparency of financial arrangements between each level of government. This relates particularly to the various exemptions and subsidies existing between State and Local Government, and the implications of these for efficient resource use and accountability.
>
> **revenue neutrality** – the financial impact of the reform proposals will be revenue neutral[10] between the two levels of government. Further, all reasonable effort must be made to

[8] https://www.legislation.tas.gov.au/view/html/inforce/current/act-1995-022
[9] https://www.legislation.tas.gov.au/view/html/inforce/current/act-1995-057
[10] The tolerance levels set for this were at $2 million to the detriment of the State Government and $500,000 to the detriment of local government.

minimise adverse financial consequences for individual councils. The extent of revenue neutrality is to be determined in respect of the 1999–00 financial year (the base year).

non-discrimination – while individual entities will be affected differently by reforms, this should only occur as a result of the consistent application of common principles, and not from a different treatment of similar bodies.

Notably, the financial reforms included:

- The application of reciprocal taxation (the removal of exemptions from State Government taxes and local government rates) and the removal of the Library Levy and the Local Government Planning Levy.
- That the rating of crown land should be based on land usage, rather than ownership.
- That Forestry Tasmania will be subject to full rating on its plantations, production forests, urban land, buildings and other infrastructure where this is not already applied.

However, as part of the agreement it was determined that Hydro Tasmania would not be subject to a standard rating approach. Instead, Hydro would be subject to an alternative rating methodology, specifically a rates equivalent regime, with the revenue retained by the State Government.

Financial modelling of the proposed reforms indicated a net position of $2.183 million in favour of local government. This would translate into a $1.732 million cost for the State Budget. These estimates were based on the 1999/2000 financial year and excluded Hydro Tasmania from the requirement to pay rates.

LGAT has a related resolution from the March 2024 General Meeting regarding the rating of electricity generation and storage developments that it has been progressing. Refer to **item 2.2** in this agenda for more information.

Should the sector confirm that it wishes LGAT to advocate for rates equivalent payments from GBEs to be distributed to councils this could cause a reconsideration of the 2003 Statewide Partnership Agreement between the Tasmanian Government and councils on financial reform, including rates payments from Crown Land and Forestry. There is also a risk that the concurrent work on securing a payment in lieu of rates framework for other energy developments (i.e. wind and solar) may be disrupted.

Consequently, confirmation is sought from the sector that it wishes LGAT to pursue this resolution in light of the history and context of this issue.

Budget Impact

Being undertaken within current resources

Current Policy

Strategic Plan

- Advocate

2025 Focus Areas

Advocate

Local government reform and sector sustainability

4.1.5. Lift the Tone

Contact Officers – Belinda Blackburn, Communications Manager and Dion Lester, CEO

Decision sought
That members note the progress on the Lift the Tone campaign.

Background

In mid-2024, LGAT began scoping a community awareness campaign to address the increasing incidences of bullying and harassment directed towards elected representatives and council staff from members of the public.

The aim of the campaign is to:

- Promote a culture of respectful communication and interaction with elected members and council staff.
- Reduce harassment and abuse by encouraging constructive and solution-oriented public discourse.
- Emphasise shared responsibility in improving the tone of community engagement, fostering stronger community connections and better local governance.

The campaign successfully launched on 3 April 2025 with comprehensive pick up across radio, TV and print media, including a number of mainland outlets (see **item 1.5 and 1.6** President and CEO reports for a list of media coverage). The potential audience reach during the first five days of the campaign was 2.7 million. The earned media campaign is being supported by a comprehensive social media campaign that includes a toolkit for councils and elected representatives.

The campaign also includes a series of short video testimonials from elected representatives sharing their experiences. These videos began rolling out on 15 May as paid advertisements on Facebook and as organic posts on LGAT social media pages. The first two paid campaigns have been completed, reaching almost 100,000 people in Tasmania. These advertisements have not only raised awareness of the campaign but have also driven traffic to the Lift the Tone webpage, where the community can find out more information and commit to the pledge. The remaining video campaigns will continue launching every fortnight until August.

In addition, LGAT has written to all Members of Parliament and various community leaders to encourage them to commit to the Lift the Tone pledge. It has been signed by Members of Parliament that include Kerry Vincent, Michael Gaffney, Madeleine Ogilvie, Tabatha Badger, Nick Duigan, Josh Willie and Ella Haddad. It has also been signed by the CEOs of TasCOSS and St Lukes, along with numerous local government representatives.

At the time of writing this report, 10 councils have passed motions of support, with others having the item included on an upcoming agenda. Those councils that have not passed the motion are encouraged to do so. There is also a suite of resources on our Member Portal[11] for individual elected members to use to support the campaign.

[11] https://www.lgat.tas.gov.au/extranet/home/communications-and-engagement/campaigns/elected-member-campaign-toolkit

To provide additional support to elected representatives, LGAT has engaged a speaker for the Annual Conference to offer practical strategies for handling toxic behaviour on social media. LGAT is also liaising with Tasmania Police to attend a future Mayors Workshop to discuss appropriate responses to verbal abuse and threats.

Budget Impact

Being undertaken with LGAT's existing resources.

Current Policy

Strategic Plan

- Advocate

2025 Focus Areas

Sector support

Elected member health and safety

4.1.6. Emergency management and recovery update

Contact Officer – Ben Morris, Policy Director

Decision sought
That members note the update on emergency management.

Background

We continue to engage with the Australian and Tasmanian Governments on emergency management and recovery issues of importance for local government. We meet monthly with Regional Coordinators from the State Emergency Service (SES) and Resilience and Recovery Tasmania (RRT).

Since the last meeting, we have participated and provided input on behalf of the sector across the following projects and topics:

- Disaster Ready Fund application assessment
- Emergency management exercise with State Government agencies
- Tasmanian Evacuation Centre Framework
- Regional Evacuation Centre guidelines
- Southern region recovery exercise
- Memorandum of Understanding for St John First aid support in southern Tasmania evacuation centres with the City of Hobart.

We are currently recruiting for a Senior Policy Advisor who will take carriage of the emergency management area and support climate change and resilience.

LGAT's Emergency Management and Recovery Review Project – Phase 1 and Phase 2

The first phase of the Local Government Emergency Management and Recovery Review project, with 18 councils participating, is now complete.

The Department of Premier and Cabinet has funded an extension to this initiative, allowing a further nine councils to take part in Phase 2. The site meetings with all the participating councils have been completed with draft reports provided to the councils through June and July. These reports provide a detailed understanding of how well the council is meeting its legislative obligations and provides recommendations for improvement.

A summary report of the two phases will be provided to the State Emergency Management Committee in September 2025. This report will highlight the needs across the local government sector, as well as areas where the State Government can better support councils and local emergency management and recovery.

Budget Impact

Being undertaken within current resources.

Current Policy

Strategic Plan

- Advocate

2025 Focus Areas

Advocate

Emergency Management

4.2. Member Services

LGAT Procurement

Networks, learning and development

4.2.1. Procurement update

Contact Officer – Georgia Palmer, Director Sector Services

Decision sought

That members note the following update on procurement support for councils.

Background

LGAT Procurement aims to help councils undertake best practice procurement and deliver value for money for their communities.

LGAT Procurement is now in its third year of implementing its five-year business plan. Implementation to date has been successful, delivering on several of the most significant initiatives, whilst also

supporting a greater than predicted increase in the use of existing panels and other LGAT procurement products and services.

LGAT Procurement Civil Works Panel

The Tasmanian minor and major civil works and civil works material panels were launched on 1 September 2024.

An update on project purpose was provided in the September 2024 General Meeting agenda and presentation.

Engagement with the panel has been mixed. Councils using the panel have reported significant efficiencies and contractors continue to provide positive feedback on the value of the panel. Feedback from officers has included:

'It enables significant tendering efficiencies'

'The Panels have been more than useful'

'Cannot see any reason why a council wouldn't adopt the panel arrangements'

'The LGAT panels are now being prioritised and we will only consider other methods where there is a gap'

'The LGAT civil procurement panels are a highly effective procurement platform for managing civil works procurement. Issuing tenders and managing the process is seamless'

Several additional councils have identified their intention to use the panel in the new financial year to deliver on several civil projects identified in their annual budgets.

To the end of June 2025, 28 RFQs, worth over $8 million have been posted from both large and small councils.

A tender refresh has recently been conducted at the request of councils and suppliers to allow for new entrants onto the panels. Successful tenders will be notified in July.

Tenderers were required to meet the same terms and conditions and be subject to the same evaluation criteria as in the initial request for tender.

Procurement Training

General

LGAT Procurement understands the importance of providing council officers engaged in tenders, contracts and other procurement activities with professional training opportunities targeted at updating and enhancing skills. Such training not only benefits the individuals, but in turn the councils and communities that they work for. LGAT Procurement offers a range of procurement-related courses specifically designed for Tasmanian local government officers. The courses are delivered by specialist procurement experts. These courses can be tailored to councils and delivered in-house. The key areas of training include procurement essentials, contract management, risk management and negotiation.

Over the past financial year, LGAT Procurement has delivered training to 92 officers from 18 councils.

A key benefit of developing and delivering the civil works panel arrangements for councils has been the opportunity for LGAT to identify key areas of training need in the civil procurement and contract management space. Emerging areas include:

- The importance of good specifications and scope of work
- Evaluating value for money
- Managing variations
- ISO qualifications – what does it mean and what are the requirements on contractors
- The importance of ongoing contract management.

LGAT Procurement is currently developing a training plan to provide targeted training in these specific civil works areas.

Budget Implications

Nil impacts

Current Policy

Strategic Plan

- Sector services

2025 Focus Areas

Member services

LGAT Procurement

4.2.2. Events and professional development overview

Contact Officer – Georgia Palmer, Director Sector Services

Decision Sought
That members note the update on events and professional development.

Financial Year Review

This financial year, LGAT has delivered 35 events to over 860 attendees. This includes a mix of webinars and face-to-face events across the state.

Pride and Progress Forum

The Pride and Progress Forum was held in partnership with Equality Tasmania at the Tramsheds in Launceston on 5 June. The forum had over 30 attendees, including councillors, officers and key advocates for LGBTQIA+ inclusion.

This forum focused on practical ways that councils can build inclusion with the LGBTQIA+ community. Attendees heard from leaders who have championed inclusion, from those within councils who have driven change, and from community members who live these realities every day. The experiences and insights on the day helped inform council action plans that were developed in a workshop with participants. LGAT will continue to support efforts by councils to include all parts of the Tasmanian community.

Child Safeguarding Sessions

The LGAT Safeguarding Children Project Team have held 13 Child Safeguarding sessions since the last General Meeting. These sessions for elected representatives, council staff and managers across the state in the period provide an overview of the Child and Youth Safe Organisations (CYSO) Framework and highlight how councillors can engage with this work. The team has also convened four training sessions for officers on trauma-informed practice so they can better support community members interacting councils. Across these events, there has been a total of 136 attendees. Further details on safeguarding children work is provided in agenda **item 4.3.1**.

Annual Conference

This year's conference will take place at the Hotel Grand Chancellor in Hobart on 20 and 21 November. The conference theme will be *Planning for the Future*. We are close to locking in a full agenda of speakers centred around this theme.

Sponsorship interest for the conference has been high with only a few offerings remaining and a range of new businesses taking up sponsorship this year. Sponsorship keeps registration costs low for members.

Communities of Practice

A Communities of Practice session for Mayors was held on 28 March and saw 10 Mayors engage in a session around psychological safety. This session was a follow-up from the Communities of Practice held in December 2024 for the Mayors to discuss issues and reflect on any changes since December.

Procurement 101 for Elected Members

LGAT Procurement recently delivered a procurement webinar for elected members. A recording of the webinar is available on the LGAT Member Portal. The webinar format was tested in response to councillor feedback on the need for flexible delivery modes to support professional development for working elected members. Unfortunately, the format did not result in additional attendees with only 10 elected members attending the session.

Upcoming Events

The below table shows upcoming events at the time of writing.

Event	Date	Venue
Elected Members Day	July 26	The Boathouse, Launceston
General Managers Workshop	September 3 and 4	White Sands
Mayors Workshop	September 17	Paranaple, Devonport
General Meeting and Annual Conference	November 20	Hotel Grand Chancellor, Hobart
Annual Conference	November 21	Hotel Grand Chancellor, Hobart

Budget Impact

Being undertaken within current resources.

Current Policy

Strategic Plan

- Sector Services

2025 Focus Areas

Advocate

Local government reform and sector sustainability

Member services

Networks, learning and development

4.2.3. Learning and development framework

Contact Officer – Ben Morris, Policy Director

Decision sought

That members note the update on the learning and development framework.

Background

The PLGC meeting of 12 December 2024 confirmed that LGAT would take the primary management of the Local Government Learning and Development Framework. This includes the hosting, maintaining and development of a suite of online learning modules.

This transition is progressing well, with work across the following key areas:

- Learning Management System (LMS) – managing the current system and procurement of a new LMS
- resourcing a learning and development coordinator
- establishing a new governance structure to support elected representative learning and development.

LMS

The current LMS has been noted by elected representatives and administrators as being difficult to use, difficult to administer and not fit for purpose. The current LMS licence is scheduled to conclude early FY2025–26 and is held by the Department of Premier and Cabinet's cyber division. Given the needs, we are procuring a new LMS that will be easy to use for learners and administrators. The Office of Local Government (OLG) has provided $10,000 to support the implementation of a new LMS.

Over the last three months, LGAT has developed a specification, undertaken a market scan and then assessed shortlisted products for suitability. We have just signed an agreement with AbsorbLMS, with implementation expected to take eight weeks.

Learning and Development Coordinator

The online modules developed as part of the framework have provided a solid foundation for elected representatives. However, we recognise that the content and the modes of learning need to better meet the needs of the sector. To support this, we have established a dedicated part-time role to provide adult learning expertise to shape our program. This will be particularly important as we move towards the 2026 local government elections with a mix of returning and new councillors. We are fortunate that we have an existing staff member with the appropriate expertise who will be shifting into the role progressively over the coming months.

Governance

The oversight of the development of the framework has been provided by the Learning and Development Framework Governance Group, with local government and OLG members. The local government members included: Mayor Mary Duniam, Mayor Paula Wriedt, John Brown (General Manager, Break O'Day), Wes Young (Manager Legal and Corporate Governance, City of Hobart) and the LGAT Policy Director. With the shift to LGAT, a new governance structure has been developed with a new sub-committee to be formed under the LGAT General Management Committee (GMC). This will comprise a minimum of six members: a GMC member who will chair the group, two elected representatives, two local government officers with an understanding of elected representative learning needs, and the LGAT Learning and Development Coordinator. An expression of interest for the council representatives will be circulated following the completion of the GMC election.

We take this opportunity to thank the members of the governance group for their significant contribution over two years.

Budget Impact

Supported by increased expenditure in LGAT Budget 2025–26 and $10,000 State Government grant.

Current Policy

Strategic Plan

- Sector services

2025 Focus Areas

Member services

Networks, learning and development

Sector support

Elected member health and safety

4.3. Sector Support

Elected member health and safety
Tasmanian Development Manual
Health and wellbeing
Community safety
Safeguarding children
Climate change
Open spaces
Environment regulation

4.3.1. Safeguarding children

Contact Officers – Lynden Leppard and Jessica Beckett

Decision sought
That members note the update on Safeguarding Children.

Background

We have been working with councils since the commencement of the *Child and Youth Safe Organisations Act 2023*[12], to support them as they review their policies and practices to ensure they can best protect children and young people from harm. Over the past 18 months, councils have progressed considerably in their implementation of the Child and Youth Safe Standards ('the Standards'). We have interacted with a diverse range of council employees and councillors through our learning and development activities.

To ensure we provide support that reflects the needs of the sector, we invited our council network to complete a short survey on standard implementation and the development of a child safe organisation. The results of this survey spoke to respondents' perceived council progress and challenges and allowed respondents to provide feedback and make suggestions on our future action.

[12] https://www.legislation.tas.gov.au/view/whole/html/asmade/act-2023-006

Key observations include:

- Respondents held various roles within their council, illustrating the integration of child safety responsibility and action across councils, which we know will contribute to sustainable cultural and systems change.
- 78 per cent of respondents noted having a Youth Advisory Group within their council, or similar, illustrating our sector's high level of meaningful engagement with children and young people and their genuine effort to involve children in decision-making.
- 82 per cent of respondents were satisfied with the level of support from LGAT and 100 per cent found our webinars to be beneficial in supporting Standards implementation.
- Respondents requested ongoing support through webinars, one-to-one support, and targeted support for executive leadership and management.

Supporting council compliance with the Standards continues to be a focus. We have been advocating to the Office of the Independent Regulator (OIR) for appropriate resources and clarity around compliance actions and timelines. We continue to consult with the OIR, providing feedback on resources in development and promoting opportunities for councils to attend in-person and online OIR education sessions.

We continue to work with the Department of Premier and Cabinet (DPAC) Reform team as a Change Lead organisation. We are contributing to the development of the first Action Plan that accompanies the revised *Change for Children Strategy*[13]. The revised strategy, released in March 2025, recognises and acknowledges the role of local government, highlighting our unique ability to make connections within the community and deliver successful place-based prevention activities.

Embedding child safety in all council policy and practice requires significant effort and resources. We are available to support all councils [14]in their child safe actions and would encourage councils to seek our support as needed. We have a large library of webinars, resources and materials available on our Teams network and LGAT members portal that is accessible to all council employees. Our program officers Lynden Leppard (lynden.leppard@lgat.tas.gov.au) and Jessica Beckett (jessica.beckett@lgat.tas.gov.au) can provide more information and support.

Budget Impact

Being undertaken within State Government grant resources.

Current Policy

Strategic Plan

- Advocate

2025 Focus Areas

Sector support

Programs

[13] https://keepingchildrensafe.tas.gov.au/change-for-children-strategy-and-action-plan/
[14] https://www.lgat.tas.gov.au/member-portal/home

4.3.2. Climate change

Contact Officer – Hannah Snape, Climate Change Program Manager

Decision sought
That members note the update on climate change activities.

Background

In April 2025, the Steering Committee for the Tasmanian Local Government Climate Capability Program approved the outcomes from the Phase One co-design and endorsed the implementation of the Phase Two activities. Since that time, implementation of the priority projects has started.

A key focus for the Program in 2025 is on strengthening municipal climate governance. This will include support and training for councillors, commencing with a training session to be held during the Elected Representatives workshop weekend in Launceston, in July. LGAT is also engaging with council partners from across the state who will receive tailored mentoring in embedding climate risk into financial planning and decision-making.

The clear need for this Program and its value to Tasmanian councils was highlighted during the co-design process in 2024, which engaged staff, executives and elected representatives from all councils statewide. Disappointingly, despite this, the Program has not yet received ongoing funding from the State Government beyond February 2026.

In a bid to continue a program of climate change activities, LGAT, together with support from Kingborough, Huon Valley and Brighton councils, submitted a joint funding bid to the Federal Government's Disaster Ready Fund for a $1 million coastal hazards project. This project would see coastal hazard maps developed for key areas currently marked as "investigation zones" in Tasmania's planning scheme. It would then explore planning tools and community engagement methodologies to support councils to make evidence-based planning decisions and also communicate with their existing coastal communities. In a great show of support, 16 Tasmanian councils pledged funding and in-kind support to this project. In addition, the State Government, through ReCFIT, have also pledged a minimum of $50,000 in funding to the project, which will be delivered to the sector regardless of the outcome of the Disaster Ready Fund application. The outcome of the Federal Government funding bid will be known in October.

Budget Impact

Being undertaken with grant funds from the Tasmanian Government.

Current Policy

Strategic Plan

- Advocate

2025 Focus Areas

Sector support

Climate change

4.3.3. EPA Memorandum of Understanding Annual Plan 2025–26 *

Contact Officer – Ben Morris, Policy Director

Decision sought
That members note the EPA Memorandum of Understanding Annual Plan 2025–26.

Background

LGAT and the Environmental Protection Authority Tasmania (EPA) re-established a Memorandum of Understanding (MoU) in 2023 to support LGAT, councils and the EPA to work together on environmental protection. In particular, to support the parties working more cooperatively in assessing and regulating environmentally relevant activities, along with responding to events that may cause environmental harm or nuisance.

The Strategic Priorities have been informed by engagement with the local government sector and areas that EPA has identified in their work alongside councils. The priorities outlined in the MoU are:

- environmental complaints, incident preparedness and response
- illegal dumping
- environmental investigations and prosecutions
- capability building
- capacity
- national standard implementation
- collaboration on more complex development applications and regulation.

A requirement of the MoU is to produce an annual action plan to be tabled at the first LGAT General Meeting each financial year. This action plan is the workplan for the EPA's Local Government Engagement Program for the next year.

The purpose of this report is to table the Annual Action Plan for 2025–26, which is included at **Attachment to item 4.3.3.**

Budget Impact

Being undertaken within current resources.

Current Policy

Strategic Plan

- Advocate

2025 Focus Areas

Sector support

Environment regulation

4.3.4. Policy update

Contact Officer – Ben Morris, Policy Director

Decision sought
That members note the update on a range of policy issues.

Infrastructure contributions

We continue to advocate for a consistent statewide approach to infrastructure charges to share the cost of council infrastructure more equitably. Infrastructure charging is a recommendation of the Future of Local Government Review (#18) (FoLGR) and a key action under the State Planning Provisions review. The State Government supported the FoLGR recommendation and responded:

> *The Government will consult with the sector and industry to investigate how a new statewide developer charges framework could work if supported by industry. This would be designed to support and incentivise effective development in designated geographic areas for defined purposes.*
>
> *The purpose of the framework would be to provide developer certainty, remove disadvantage for early movers and support redevelopment and urban design. The framework would also include transparency measures to ensure that the developer charges were not used for general revenue raising. As a priority, the framework would target areas of medium density residential development.*

We recently met with the Department of State Growth and the State Planning Office (SPO) to progress this action. There was a recognition of the need to engage with councils and the development industry. The meeting highlighted the need for LGAT to make the case that a contributions scheme is enabler of development through timely funding and delivery of infrastructure that development and communities require, rather than a cost/red tape impact on development. The other important issue for us to illustrate is the positive role local government infrastructure plays in making liveable communities and attracting residents and businesses that make development viable.

We note the caveats embedded in the State Government's response to FoLGR recommendation: "consult with…industry" and "if supported by industry" for "designated geographic areas for defined purposes." This highlights the need for LGAT to engage well with industry to build a collaboration for shared outcomes.

Infrastructure contributions are a key inclusion in LGAT state election policy advocacy and we will continue to work with a new government and agencies to progress this strategic priority following the election.

Cat management

The review of the Cat Management Plan is underway, albeit moving slowly and is now paused with the state election. A survey to better understand the views and practices within the community around cats is open. We continue to engage with the Department of Natural Resources and Environment, as well as the regional cat management groups, to provide a local government perspective. We will advise of the specific council engagement opportunities when we have further information.

Waste and resource recovery

After a long gestation period, the Recycle Rewards Container Refund Scheme (CRS), launched on 1 May 2025. Recycle Rewards is intended to improve resource recovery and reduce litter, with drink containers making up 45% of Tasmania's litter by volume. It is estimated that Recycle Rewards will reduce this by up to half, as well as doubling the recycling rates of eligible drink containers.

We made a submission[15] on the protocol for how the CRS interacts with material recovery facilities (MRF). This protocol will help determine the costs and revenue allocation for deposit-bearing containers that enter a MRF and the cost contribution to the CRS more broadly. In our submission, we highlighted our disappointment with the three-week consultation period for a protocol that helps determine the allocation of many millions of dollars. We supported the default 50 / 50 share of revenue between the councils and the MRF, and methodology calculation. The key points in our submission were that:

- we supported the 50/50 cost/benefit share between councils and the MRF
- the costs for baseline audits should be borne by the scheme coordinator
- councils should be able to claim for administrative costs around the scheme
- audit protocols should be established to provide consistency and certainty around costs.

Budget Impact

Being undertaken within current resources.

Current Policy

Strategic Plan

- Advocate

2025 Focus Areas

Advocate

Local government reform and sector sustainability
Housing
Infrastructure

[15] Available at: www.lgat.tas.gov.au > Policy and advocacy > Reports and submissions

4.3.5. Sector support update

Contact Officer – Ben Morris, Policy Director

Decision sought

That members note the update on the Health and Wellbeing program, the CCTV Regional Towns Security Cameras Project and the Development.

Health and Wellbeing Network

The Health and Wellbeing Network, delivered with funding and support from the State Government through Public Health Services, brings together council staff from across the state who are focused on delivering health and wellbeing services to Tasmanian communities. This funding, which was due to expire in December 2025, was extended in the recent State budget for another year to the value of an additional $100,000. This reflects the value the network provides to the sector and the importance of councils in delivering health and wellbeing outcomes for Tasmanian communities.

During this reporting period, we have continued with our online training sessions on Asset-based Community Development (ABCD) with the Jeder Institute. Two further sessions were held in April and May, with councils from across the state in attendance. Positive feedback was received, one attendee emailing organisers to say, "*.. I am really grateful for the session like yesterday! Found them interesting and engaging... thanks!*".

The next major event for the Network will be a West Coast workshop, to be co-hosted with West Coast Council. This workshop, planned for September, will enable West Coast to showcase the history of their region and the strong relationship they've been developing with their community, as well as providing a professional and personal development opportunity for visiting council attendees.

In May, consultation closed on the Tasmanian Government's 20-year Preventative Health Strategy. This strategy will replace the existing Healthy Tasmania 5-year Strategic Plan, under which the Health and Wellbeing Network is funded. LGAT made a submission to the development of the new strategy that highlighted the huge influence councils have on preventative health outcomes, through their legislated and discretionary roles in delivering public health, infrastructure, land-use planning, open spaces, facilities, waste, climate change and community development. You can read more here[16].

CCTV Regional Towns Security Camera Project

This CCTV Regional Towns Security Camera Project is progressing well, with all contracts awarded and participating councils notified, with expected completion in February 2026. We now have 23 of the 24 regional councils participating in the project, and we are working with additional urban councils on system improvements and the software platform. At the same time, we are working through some of the complexities with a Memorandum of Understanding between councils and Tasmanian Police on CCTV image access and look forward to progressing this in the coming months.

[16] https://www.lgat.tas.gov.au/__data/assets/pdf_file/0026/1814183/LGFBC6~1.PDF

Collaborative Population Planning and Regional Development

LGAT has been successful in securing a $200,000 grant to undertake the first stage of the Collaborative Population Planning and Regional Development (CPPRD) project. This project will be delivered through a partnership between LGAT, the Tasmanian Policy Exchange, the Department of State Growth and Dr Lisa Denny to progress two specific actions under Tasmania's Population Policy.

Stage One of the CPPRD project is focused on building capacity within local government to understand population dynamics and apply demographic analysis in planning and decision-making. Through a series of workshops and supporting materials, networks of participants will be established, laying the foundations for the development of regional population plans in Stages Two and Three of the project.

Tasmanian Development Manual Project

Our Tasmanian Development Manual (TDM) project is progressing well. It will include a range of pre-application design guidelines and post approval construction standards. The manual will be a convenient single reference point for proponents in informing development proposals and post-approval compliance requirements for construction.

The consultation on draft manual and infrastructure guidelines is underway with councils, key State Government agencies and utilities. Feedback is being incorporated into the two documents.

We are currently assessing whether a detailed review of the Tasmanian design drawings and AUS-SPEC can be brought into this current project. AUS-SPEC is the national local government specification system for the life cycle management of assets.

Budget Impact

Health and Wellbeing – being undertaken with external grant funds from the Tasmanian Government via the Public Health Service

Regional Towns CCTV - being undertaken with external grant funds from the Tasmanian Government via the Department of State Growth.

Collaborative Population Planning and Regional Development (CPPRD) project. – being undertaken with external grant funds from the Tasmanian Government via the Department of State Growth.

Tasmanian Development Manual - being undertaken with external grant funds from the Tasmanian Government, through the State Planning Office and previous council contributions for the maintenance of the Tasmanian Municipal Standards.

Current Policy

Strategic Plan

- Advocate

2025 Focus Areas

Sector support

Tasmanian Development Manual

Programs

5. Other business and close

There is no other business.

5.1. Next meetings and close

That Members note the next meeting will be held on 20 November 2025, Hobart.

2025		
July		
26 July	Elected Members Workshop	Launceston
September		
3-4 September	General Managers Workshop	White Sands Resort
16 September	General Management Committee meeting	Devonport, location TBC
17 September	Mayors Workshop	Devonport
November		
19 or 20 November	General Management Committee meeting (to be confirmed)	Hobart, location TBC
20 November	General Meeting & Annual Conference	Hobart, Hotel Grand Chancellor
21 November	Annual Conference	Hobart, Hotel Grand Chancellor
December		
11 December	General Management Committee meeting and PLGC (to be confirmed)	Hobart

Attachment to item 1.1

General Meeting Minutes

Wednesday 2 April 2025

Commencing at 10:30 am

Crowne Plaza Hobart

‘Centurion 1’ meeting room

110 Liverpool Street, Hobart

326 Macquarie Street, GPO Box 1521, Hobart, Tas 7000

Phone: (03) 6146 3740

Email: admin@lgat.tas.gov.au

Home Page: http://www.lgat.tas.gov.au

Procedural Matters
Rules regarding conduct of meetings

13. Who may attend a meeting of the Association

(a) Subject to Rule 13(f), each Member shall be entitled to send a Voting Representative to any Meeting of the Association, such Voting Representative exercising the number of votes determined according to Rule 16(a).

(b) In addition to the requirements set out in Rule 13(f), after each ordinary Council Election, the Chief Executive Officer shall request each Member to advise the name of its Voting Representative and the proxy for the Voting Representative for Meetings of the Association until the next ordinary Council Elections.

(c) Subject to Rule 13(f), Members may change their Voting Representative or proxy at any time by advising the Chief Executive Officer in writing of the Voting Representative prior to that representative taking his or her position at a Meeting of the Association.

(d) A list of Voting Representatives will be made available at the commencement of any Meeting of the Association.

(e) Members may send other elected members or Council officers as observers to any Meeting of the Association.

(f) Each Member must provide the Association with written notice of the details of the Voting Representative who was by a resolution of the Member lawfully appointed as the Voting Representative of the Member at a Meeting of the Association.

14. Proxies at meetings

(a) Up to 1 hour prior to any Meeting of the Association, a Member may appoint another Member as its proxy.

(b) The form of the proxy is to be provided by the Chief Executive Officer and is to be signed by either the Mayor or General Manager of the Council appointing the proxy.

(c) The Chair of the meeting is not entitled to inquire as to whether the proxy has cast any vote in accordance with the wishes of the Member appointing the proxy.

(d) Proxies count for the purposes of voting and quorum at any meeting.

15. Quorum at meetings

(a) At any Meeting of the Association, a majority of the Member Councils shall constitute a quorum.

(b) If a quorum is not present within one hour after the time appointed for the commencement of a Meeting of the Association, the meeting is to be adjourned to a time and date specified by the Chair.

16. Voting at meetings

(a) Voting at any Meeting of the Association shall be upon the basis of each Voting Representative being provided with, immediately prior to the meeting, an electronic voting button or placard which is to be used for the purpose of voting at the meeting. The placard will be coloured according to voting entitlement and the voting buttons will be coded according to voting entitlement:

Population of the Council Area	Number of votes entitled to be exercised by the voting delegate	Colour placard to be raised by the voting delegate when voting
Under 10,000	1	Red
10,000 – 19,999	2	White
20,000 – 39,999	3	Blue
40,000 and above	4	Green

(b) Electronic voting buttons will be the first choice for voting on all decisions, with placards only to be used if the technology fails.

(c) Voting buttons allow councils to vote for or against a motion or formally abstain from voting. An abstain is not to be taken as a negative vote.

(d) The Chair of the meeting shall be entitled to rely upon the electronic vote or the raising of a coloured placard as the recording of the vote for the Member and as evidence of the number of votes being cast.

(e) Except as provided in sub-rule (f), each question, matter or resolution shall be decided by a majority of the votes for a motion. If there is an equal number of votes upon any question, it shall be declared not carried.

(f)

(i) When a vote is being taken to amend a Policy of the Association, the resolution must be carried by a majority of the votes capable of being cast by Members present at the meeting.

(ii) When a vote is being taken for the Association to sign a protocol, memorandum of understanding or partnership agreement, the resolution must be carried by a majority of votes capable of being cast by Members and by a majority of Members, whether present at the meeting or not.

(iii) When a vote is being taken to amend these Rules of the Association, the resolution must be carried by at least two-thirds of the votes capable of being cast by Members, whether present at the meeting or not.

(g) A Voting Representative or his or her proxy in the name of the Member is entitled to vote on any matter considered at a Meeting of the Association.

Table of Contents

1. Governance 5

ACKNOWLEDGEMENT OF COUNTRY 5

WELCOME AND APOLOGIES 5

1.1. CONFIRMATION OF MINUTES * 6

1.2. BUSINESS ARISING * 6

1.3. CONFIRMATION OF AGENDA 6

1.4. FOLLOW UP OF MOTIONS * 7

1.5. PRESIDENT'S REPORT 7

1.6. CHIEF EXECUTIVE OFFICERS REPORT 9

1.7. ANNUAL PLAN UPDATE * 12

1.8. COUNCIL ROUNDUP 12

2. Items for decision 12

2.1. MOTION - ADOPTION OF 7 STAR ENERGY EFFICIENCY REQUIREMENTS 12

2.2. MOTION - FUNDING FOR LINE MARKING ON LOCAL GOVERNMENT ROADS 14

2.3. MOTION – PUBLIC OPEN SPACE CONTRIBUTIONS * 16

2.4. MOTION – PROPOSED OFFSHORE OIL AND GAS DEVELOPMENT IN TASMANIA 17

3. Items for discussion 26

3.1. DEVELOPMENT ASSESSMENT PANELS (DAPS) 26

3.2. DEVELOPMENT ASSESSMENT PANELS (DAPS) FALLBACK POSITION 27

4. Items for noting 28

4.1. ADVOCATE 28

4.1.1. LOCAL GOVERNMENT REFORM 28

4.1.2. FEDERAL ELECTION 29

4.1.3. PLANNING 31

4.1.4. EMERGENCY MANAGEMENT AND RECOVERY UPDATE 32

4.2. MEMBER SERVICES 35

4.2.1. PROCUREMENT UPDATE 35

4.2.2. EVENTS AND PROFESSIONAL DEVELOPMENT OVERVIEW * 37

4.3. SECTOR SUPPORT 39

4.3.1. WORKPLACE HEALTH AND SAFETY REVIEW * 39

4.3.2. LIFT THE TONE 40

4.3.3. SAFEGUARDING CHILDREN UPDATE 41

4.3.4. CLIMATE CHANGE UPDATE 43

4.3.5. POLICY UPDATE 44

4.3.6. SECTOR SUPPORT UPDATE 46

5. Other business and close 48

5.1. NEXT MEETINGS AND CLOSE 48

*** Denotes Attachment**

DRAFT

General meeting schedule

10:00 am	**Tea and Coffee on arrival**
10:30 am	**General meeting commences** Crowne Plaza Hobart, 110 Liverpool Street, Hobart
12:30 pm (approx.)	**A light lunch will be served at the conclusion of the meeting**

DRAFT

General Meeting

2 April 2025

1. Governance

Acknowledgement of country

We acknowledged the traditional custodians of this land Tasmania, the Palawa people, and recognised their continuing connection to the lands, skies, and water. We paid respect to the elders, past and present.

Welcome and apologies

The President welcomed Members and declared the meeting open at 10:30 am.

The following apologies were noted:

Deputy Mayor Kristi Chapple	Break O'Day Council
Mayor Teeny Brumby	Burnie City Council
General Manager Shane Crawford	Burnie City Council
Mayor Gerard Blizzard	Circular Head Council
CEO Ian Nelson	Clarence City Council
Mayor Michelle Dracoulis	Derwent Valley Council
General Manager John Marik	Dorset Council
Deputy Mayor Vanessa Grace	Flinders Island Council
General Manager, Jason Browne	Kentish/Latrobe Council
Mayor Marcus Blackie	King Island Council
Deputy Mayor Vernon Philbey	King Island Council
Acting General Manager Catherine Dale	King Island Council
General Manager Jonathan Harmey	Meander Valley Council
General Manager, Vanessa Adams	Waratah-Wynyard Council
Mayor Christina Holmdahl	West Tamar Council
General Manager John Brown	Break O'Day
Deputy Mayor Stacey Sheehan	Devonport City Council

1.1. Confirmation of minutes *

Central Highlands Council / Kingborough Council

That the minutes of the meeting held on 21 November 2024, as circulated be confirmed.

Carried unanimously

Background

The Minutes of the General Meeting held on 21 November 2024, as circulated, are submitted for confirmation and are at **Attachment to Item 1.1**.

1.2. Business arising *

That members note the information.

Background

At **Attachment to Item 1.2** is a schedule of business considered at the previous meeting and its status.

1.3. Confirmation of agenda

Kingborough Council / Huon Valley Council

That consideration be given to the agenda items and the order of business.

Carried unanimously

Background

Delegates will be invited to confirm the agenda for the meeting and the order of business.

DRAFT

1.4. Follow up of motions *

Flinders Council / Central Highlands Council

That Members note the following report.

Carried unanimously

Background

A table detailing action taken to date in relation to motions passed at previous meetings is at **Attachment to Item 1.4.**

1.5. President's Report

Meander Valley Council / Kentish Council

That Members note the report on the President's activity from 30 October 2024 to 14 March 2025.

Carried unanimously

Meetings and events

- LGAT November General Meeting
- Mayors workshop
- ALGA December and March Board Meeting
- National Roads Congress
- December 2024 PLGC meeting
- Building and Construction Roundtable
- ALGA strategic planning
- President and Vice President meeting
- Meeting with Premier on various items, including DAPs and LGATs State Budget Priority Statement
- Local Government Reform Program workshop
- Moderator at Dorset to meet the Mayoral candidates

Correspondence

- President report – LGAT Year in Review
- December LGAT News President Report
- Letters to the Minister's for Local Government, Planning, Energy (Climate Change portfolio) introducing LGATs State Budget Priority Statement
- Letters to Minister for Planning and Premier on planning reform

DRAFT

Media

Development Assessment Panels

- Media releases
  - 21 November 2024
  - 28 November 2024
- Articles
  - Tasmanian Times, 21 November 2024
  - The Mercury, 22 November 2024
  - Pulse Tasmania, 22 November 2024
  - Pulse Tasmania, 29 November 2024
  - ABC, 29 November 2024
  - Local Government Career, 3 December 2024
- TV/Radio
  - ABC Hobart, 29 November 2024
  - LAFM, 29 November 2024
  - HOFM, 29 November 2024

New Minister for Local Government

- Articles
  - Tasman Gazette, 25 November 2024
  - East Coast View, 25 November 2024

Future of Local Government Review

- TV/Radio
  - WIN News, 27 November 2024
  - ABC Hobart, 27 November 2024
  - ABC Northern Drive, 27 November 2024
  - Seven News, 27 November 2024
  - LAFM, 28 November 2024
- Articles
  - The Mercury, 28 November 2024
  - The Advocate, 28 November 2024
  - The Examiner, 28 November 2024
  - Inside Local Government, 2 December 2024

Code of Conduct

- Article
  - The Mercury, 22 December 2024

DRAFT

Local Government Q&A

- Media enquiry
  - Government News, 13 January 2025
- Article
  - Government News, 20 January 2025

Dorset Council Inquiry

- Media query
  - ABC, 22 January 2025

State Budget

- Article
  - Inside Local Government, 17 February 2025

Subdivision legislation

- Article
  - Pulse Tasmania, 17 February 2025
- TV
  - ABC, 16 February 2025

1.6. Chief Executive Officers Report

Northern Midlands Council / West Coast Council

That Members note the report on the CEO's activity from 30 October 2024 to 14 March 2025.

Carried unanimously

Advocacy

In the period since my last report there has been significant (and successful) advocacy regarding Development Assessment Panels[1] and for increased attention and investment in the Regional Land Use Strategies, production and dissemination of LGATs State Budget Priority Statement, our Year in Review and submissions on the revised Change for Children Strategy and Tasmanian Fire and Emergency Services Reforms, both are available on our website[2].

[1] Noting version 2 is now out for consultation.
[2] https://www.lgat.tas.gov.au/lgat-advocacy/reports-and-submissions

Member Services

Across our member services there has been ongoing support of councils to access the new civil works panels, launched in September 2024 and in finalising the details associated with the three sectoral energy tenders (street lighting, small and large sites). Detailed planning and preparatory work have also commenced for our 2025 events.

Sector Support

In December 2024 we facilitated three further Communities of Practice, for elected representatives on "Finding the Balance: You as a Councillor" and separate sessions for Mayors and Deputy Mayors on psychological safety as a follow up discussion to the presentation at the LGAT Mayors and Deputy Mayors workshop by Rachel Moore.

The overall feedback indicated a high level of satisfaction, with an average rating of 4.5 out of five for the sessions.

Attendees indicated that they found the open discussion format particularly useful, emphasising the value of hearing from fellow elected representatives.

Since the last meeting there has also been work on:

- Developing an accompanying "toolkit" to support the Office of Local Government's recently released Elected Member Unreasonable Behaviours – Model Guidelines. This has been provided to council General Managers and is available on the LGAT Member Portal.
- Resolution of the uncertainty created over what councillor and staff legal expenses could be covered by a council following a recent Supreme Court Decision,
- Release of the LGAT draft template local dispute resolution policy, process and panel of mediators. At the time of writing, a number of councils had adopted the template policy.
- Transitioning the Learning and Development Framework and related infrastructure from the Office of Local Government to LGAT.

Governance and Operations

In the current period the priority has been on the development of position descriptions for several staff changes.

Media

The following summarises the traditional media the LGAT CEO or Secretariat[3] has secured during the reporting period. This forms a small component of our overall communications activities, with social media being an important part.

[3] LGAT President media is listed separately in the President's Report.

Housing

- Opinion editorial
  - The Examiner, 29 November 2024
  - The Advocate, 30 November 2024
- Media query
  - Government News, 2 December 2024
- Article
  - Government News, 2 December 2024
  - Council Magazine, 3 December 2024

Council Rates

- Media query
  - ABC, 9 December 2024
  - ABC, 18 February 2025
- Article
  - Farming Tasmania, 20 December 2024

Waste Management

- Media query
  - The Mercury, 16 December 2024
- Article
  - The Mercury, 18 December 2024

Glenorchy Council IT Breach

- Media query
  - ABC, 18 December 2024

CCTV Program – State Budget Ask

- Articles
  - The Advocate, 7 January 2025
  - The Examiner, 7 January 2025

DRAFT

1.7. Annual Plan update *

Devonport City Council / Central Highlands Council

That Members note the report against the Annual Plan.

Carried unanimously

Background

An **Attachment to Item 1.7** is a copy of the LGAT Annual Plan and progress to date.

1.8. Council roundup

That Members note there will be a council round up by Devonport City Council.

Northern Midlands Council confirmed that they will provide a council round up at the next meeting.

Background

The session also allows time for questions and provides an opportunity to briefly share and highlight problems or opportunities facing councils.

2. Items for decision

2.1. Motion - Adoption of 7 star energy efficiency requirements

Council – City of Hobart

City of Hobart / Glenorchy City Council

That the Local Government Association of Tasmania lobby the Tasmanian Government to adopt the 7 star energy efficiency requirements of the National Construction Code 2022 to provide more comfortable homes with lower energy running costs for Tasmanians.

Lost

Background

The 2022 National Construction Code[4] (NCC) requires all new Australian houses and apartments to meet a minimum energy efficiency rating of 7 stars under the Nationwide House Energy Rating

[4] https://ncc.abcb.gov.au/editions/ncc-2022

Scheme[5] (NatHERS). With all States (with WA beginning 1 May 2025) and the ACT rolling out 7 star efficiency requirements since then, Tasmania continues to lag behind this vital requirement.

Energy efficient design is about creating homes that are comfortable for people to live in all year round. That is, naturally cool in summer and warm in winter without the need for costly energy sources. Temperature and light are maintained at comfortable levels with a minimum requirement for active systems such as heaters, air conditioners and daytime lighting.

Energy efficiency is of particular importance in Tasmania, given our weather extremes between our cold winters and hot summer days. Tasmania also has a large amount of poorly insulated and inefficient housing stock that results in significantly higher energy bills over the lifetime of the building.

The results of setting a minimum energy efficiency rating of 7 stars are homes that are considerably cheaper for homeowners to run, with a higher capital value, and with a lower demand on the energy grid resultant emissions; It is expected that this will offset the additional construction cost that is associated with the 7 star requirement.

The 7 star energy efficiency ratings in the NCC have also been combined with initial condensation provisions set in NCC 2019, further measures in NCC 2022, and additional refinements and measures are anticipated for NCC 2025. Building elements that will assist in meeting 7 stars, such as improved insulation and double-glazing, are expected to reduce condensation risk.

In 2022, the then Tasmanian Minister for Workplace Safety and Consumer Affairs, Elise Archer, said that the Tasmanian Government would be "deferring consideration of the compulsory 7 Star energy efficiency rating until the next iteration of the NCC in 2025". More recent communications suggest that this has been deferred again with a commitment to an implementation date unclear.

Given the impending 2025 update of the NCC, it is timely that the Tasmanian Government agrees to the existing national standards.

LGAT Comment

All other Australian states and territories excluding the Northern Territory have now adopted the NCC 7-star energy efficiency requirements for housing and apartments.

State/Territory	Housing energy efficiency	Apartment energy efficiency
Australian Capital Territory	Effective 15 January 2024	Effective 15 January 2024
New South Wales	Effective 1 October 2023	Effective 1 October 2023
Queensland	Effective 1 May 2024	Effective 1 May 2024
South Australia	Effective 1 October 2024	Effective 1 October 2024
Victoria	Effective 1 May 2024	Effective 1 May 2024
Western Australia	Effective 1 May 2025	Effective 1 May 2025

[5] https://www.nathers.gov.au/

Australian Building Codes Board, 2023, NCC 2022 state and territory adoption dates[6]*, (accessed 6 March 2025).*

Two previous motions have been received relating to the adoption of energy efficiency standards for housing.

> ***2006***
> *Building Code of Australia Amendments: The Tasmanian State Government should adopt, as soon as possible, the new Building Code of Australia amendments that provide for increasing the energy provisions up to a Five Star rating for new houses.*
>
> ***2012***
> *That the Local Government Association of Tasmania, request the State and Federal Governments review the AMCORD [Australian Model Code for Residential Development] and Tascord Guidelines as they have not been revisited for many years, to take into account more effective passive energy design outcomes.*

2.2. Motion - Funding for line marking on local government roads

Council - City of Hobart

City of Hobart / Devonport City Council

That the Local Government Association of Tasmania lobby the Tasmanian Government to urgently increase the allocation of state-based funds for line marking on local government roads to more closely align with the quantum required to meet safe operating standards.

Carried unanimously

Background

In the past, the State Government was responsible for the maintenance of line marking with little or no involvement from Local Government. However, over the last decade and a half, there has been a progressive movement by the state government to make local government more responsible for line marking on local government control.

The intent of providing line marking on our roads is fundamentally to guide and improve safety for all road users. It is critical that adequate funding is provided to ensure that roads are suitably line marked to meet current road safety standards.

Road line marking is an important function which must be adequately funded and resourced. Indeed, the Towards Zero Tasmanian Road Safety Strategy 2017-2026 includes a direction to 'Reduce serious casualties through improved delineation (e.g. line marking).

[6] https://www.abcb.gov.au/ncc-2022-state-and-territory-adoption-dates

Although a nominal amount of $850,000 has been allocated, currently the state government only provides between $400,000-$450,000 in funding to local government for line marking which is sourced from the state's Road Safety Levy.

There is clearly a need for the state government, who collect or receive fees and taxes for road maintenance and improvements, to allocate adequate funding for local government to ensure the requirements for adequate road line markings met current safety standards.

Given this is a statewide issue for the local government sector, the City of Hobart has requested that this motion be presented to the next LGAT meeting requesting that a formal approach be made to the state government seeking an urgent increase to line marking funding.

The City of Hobart recently completed a line marking inventory analysis, which has identified that the city requires a catch-up spend of $500,000 per year over three years and then an annual spend of $250,000 thereafter to maintain our line markings. These figures are based on an assessment that 20% of line markings should be renewed each year for the next three years (to catch-up) and, after that time, 10% of line marking should be replaced each year.

LGAT comment

In November 2023, the following resolution was supported by the sector:

> *That LGAT undertake advocacy on behalf of Councils to have road line marking responsibilities legislated and additional funding provided by the State Government.*

Recent activity on this motion has included:

- This issue being raised in our submission in the Road Management Legislation Review in 2024.
- Successfully advocating to the Road Safety Advisory Council (RSAC)for a small increase out of the Road Safety Levy in their annual line marking allocation in 2024.
- Raising this with the Transport Minister advocating for increased funding and clarity around responsibilities, who responded indicating that the Department of State Growth (DSG) is currently reviewing the best way to provide funding and more effectively deliver this program in the future.

In late February we met with the relevant Deputy Secretary who has signalled a willingness to work with the local government sector for a more strategic approach. As a result of this discussion, it was confirmed that:

- The 2025/26 Road Safety Levy allocation for local government will be increased to ~$600k.
- DSG is going to request councils provide an indication of their road line marking priorities over the next three years to allow a better understanding of the quantum of required works and to aid in programming.
- There will be consideration of changes (and potentially increases) to the funding, but this may be on a co-contribution basis.

2.3. Motion – Public open space contributions *

Council – Brighton

Brighton Council / Flinders Council

That the Local Government Association of Tasmania lobby the Minister for Housing, Planning and Consumer Affairs and the State Planning Office to work with Councils to introduce an Open Space Policy that includes contribution requirements for all forms of subdivision including strata developments.

Carried

Background

As at **Attachment 2.3** the Minister for Housing, Planning and Consumer Affairs, Felix Ellis MP recently announced plans to repeal the *Local Government (Building and Miscellaneous Provisions) Act 1993* (LGBMP) to streamline the approvals of subdivisions. This has presented an opportunity to look at addressing the issue of Public Open Space (POS) contributions, specifically for the inclusion of strata developments.

Under the current provisions, councils have the ability to require land or payment in lieu of an open space land contribution for subdivisions (Division 8, ss116 and 117 LGBMP). However, there has been no such requirement for Strata Developments. This raises the issue of equity and fairness as strata developments generally being of a higher residential density create a greater demand for open space than a standard subdivision.

It is well known that POS contributions are crucial for sustainable urban development, enhancing community amenities and supporting balanced growth. Infrastructure planning is essential for a community's economic and social well-being. New developments must provide cost-efficient and appropriate infrastructure such as roads, electricity, telecommunications and POS. POS offers recreational opportunities and green spaces for residents, visitors, and workers, serving various purposes like recreation, nature, events, and drainage.

Furthermore, in most growth areas around Tasmania, the share of residential development that is made up of medium density strata development rather than traditional broad acre subdivision, is much higher than in the past.

As new residential lots increase housing demands, so too does the need for POS. Meeting or upgrading POS needs is a joint responsibility of the government and developers. This has been recognised across other states in Australia and policy decisions have reflected this. For instance, the Western Australian Government have a draft policy position that '*all forms of land subdivision, that increase the demand for POS, can be subject to a contribution requirement, including all types of strata subdivision*'. It is noted that the POS contribution requirements vary in each state and range from 5% up to 12.5%.

This is a matter that concerns all councils, and a consistent approach is vital. The intention with the advocacy would be to develop a Policy which addresses the current fairness and equality issues and provides clear requirements for developers and councils in relation to POS contributions.

LGAT comment

LGAT has two previous resolutions related to this motion, from July 2013 and July 2016 respectively:

> ***July 2013***
>
> *The Local Government Association of Tasmania request the Minister for Planning to review and, if appropriate, repeal Part 3 of the Local Government (Building and Miscellaneous Provisions) Act 1993 in relation to subdivision provisions and make necessary amendments to the Land Use Planning and Approvals Act 1993 and other consequential amendments such as the Land Titles Act 1980 and have all relevant provisions associated with subdivisions contained in the relevant legislation. That this review of the provisions ensure that the new provisions are drafted in plain English.*
>
> ***2016***
>
> *That Members endorse the identified reform agenda priorities from a Local Government perspective, being –*
>
> - *State Planning Policy development;*
> - *A greater emphasis on Regional Planning;*
> - *Improving the planning appeal process;*
> - *Changing notification requirements for discretionary applications; and*
> - *Consolidating subdivision legislation.*

2.4. Motion – Proposed offshore oil and gas development in Tasmania

Council – Waratah-Wynyard

Waratah-Wynyard / Hobart City Council

That the Local Government Association of Tasmania advocate to Tasmanian State and Federal Government to not approve any new offshore oil and gas exploration and development in Tasmanian and Commonwealth waters.

Lost

Background

At a Council Meeting on 16 December 2024 Council resolved to advocate to LGAT a motion put forward by its Sustainability and Environmental Advisory Panel (SEAP) regarding offshore gas and oil exploration.

Council's SEAP was created to:

- Represent a range of sectors and opinions relating to or impacting the natural environment, including community, agency, industry etc;
- Provide input and advice to Council on issues of environmental sustainability;
- Provide input to Council on behalf of the community and community organisations;
- Actively support Council's consultation with and advocacy to the broader community;
- Provide specific and targeted feedback on relevant policies, strategies and key environmental initiatives;
- Establish working groups on an as required basis;
- Monitor and review environmental and sustainability issues in Waratah-Wynyard;
- Advocate (within the SEAP's structure) to Council for the benefit of the Waratah-Wynyard environment; and
- Assist Council in determination of priority activities to be undertaken, annual objectives and action plans.

The SEAP group is made of nine community members with strengths in technical and scientific skill sets, alongside other applicants with demonstrated strengths in community collaboration and sustainability education. This group is also supported by two Councillors and relevant staff members.

Key Points:

- The extraction and use of oil and gas is a major driver of climate change.
- Climate change creates enormous problems for local governments of Tasmania and the communities they serve.
- Councils cannot directly influence the approval of oil and gas development in waters off Tasmania, but it can advocate on this issue.
- Advocating to LGAT and the Tasmanian State and Federal Governments on this issue is consistent with Council's commitments to promote action to mitigate climate change.

The continued expansion of oil and gas in waters off Tasmania is inconsistent with our community and global efforts to reduce climate pollution, while also damaging to our marine life and coastal economy.

Council's Sustainability and Environmental Advisory Panel (SEAP) has requested that council act within its capacity to advocate for an end to offshore oil and gas exploration and development in Tasmanian and Commonwealth waters off Tasmania, consistent with its award-winning Integrated Council Environmental Plan 2020-2030 (iCEP) and in line with state and federal commitments to act consistently with the Paris Agreement and the latest and best available science.

Oil and gas are polluting fossil fuels which are driving climate change. The exploration and extraction of offshore oil and gas is an inherently risky process with the potential to impact on Tasmania's marine resources directly and indirectly at both the resource survey stage and during resource drilling and extraction. The continued development of new fossil fuel projects is inconsistent with modelled pathways to net-zero emissions and a safe climate future.

The latest science on global temperatures and greenhouse gas emissions show that local and global emissions reduction efforts are well off track to meet the Paris Agreement goal of limiting global warming to well below 2°C and aiming for 1.5°C above pre-industrial levels. Governments have committed to increasingly ambitious emissions reductions targets but are consistently not acting in line with those commitments.

Tasmanian local governments do not have jurisdiction over the exploration, development and management of offshore oil and gas yet they are at the forefront of the impacts of our changing climate and other detrimental impacts of offshore oil and gas exploration and development, including oil spills and seismic testing.

The proposed motions to the Local Government Association of Tasmania seek to acknowledge that offshore oil and gas development off Tasmania impacts upon Tasmanian Local Governments and the communities that they serve. The motions propose the development of a Position Statement on offshore oil and gas development that demonstrates Local Governments commitment to climate mitigation consistent with the science, and to advocate to the Tasmanian State and Federal Government to also act on their commitments to effective climate action.

Detailed Briefing Note

Offshore oil and gas exploration and development off Tasmania – *The status and implications for Tasmanian communities and local government*.

1. **Why is offshore oil and gas exploration and development a problem?**
   Oil and gas are fossil fuels driving climate change:

Oil and gas are fossil fuels which release potent greenhouses gases into the atmosphere from leakage during their production and distribution and when these fuels are burnt for energy. These greenhouse gases are accumulating in our atmosphere and driving climate change.

The latest science is clear that our climate is warming much faster than predicted and most countries are not on track to meet their emissions reduction targets. The science is clear that we need to draw a line in the sand and not approve any new fossil fuel projects - the major driver of our warming planet.

Australia is a signatory of the Paris Agreement, a **legally binding international treaty on climate change**. It was adopted by 196 Parties at the UN Climate Change Conference (COP21) in Paris, France, on 12 December 2015. It entered into force on 4 November 2016.

The Paris Agreement's overarching goal is to hold "the increase in the global average temperature to well below 2°C above pre-industrial levels" and pursue efforts "to limit the temperature increase to 1.5°C above pre-industrial levels." In recent years, however, world leaders have stressed the need to limit global warming to 1.5°C by the end of this century. This is because the UN's Intergovernmental

Panel on Climate Change indicates that crossing the 1.5°C threshold risks unleashing far more severe climate change impacts, including more frequent and severe droughts, heatwaves, and rainfall events. To limit global warming to 1.5°C, greenhouse gas emissions must peak before 2025 at the latest and decline 43% by 2030.

The State of the Climate Report 2024 developed by the Bureau of Meteorology and the CSIRO show a frightening reality of our heating planet. The report was released in November 2024 and shows Australia's climate has warmed by an average of 1.51°C since national records began in 1910, recording a consistent picture of ongoing and long-term human driven climate change. The recorded changes in the climate are happening at an increasing pace; the past decade has seen record-breaking extremes contributing to natural disasters that are exacerbated by human-caused climate change, including 'compound events', where multiple hazards and/or drivers occur together or in a close sequence, which intensifies their impacts.

The State of the Climate Report combined with the latest Greenhouse Gas Bulletin from the World Meteorological Organisation demonstrate that we are well off track to meet the objectives of the Paris Agreement, with devastating consequences for our planet and all of us who live upon it.

Australian Climate Change and Energy Minister Chris Bowen has stated that Australia is currently not on track to meet its 2030 emission reduction target, yet despite this the Australian government in July 2024, announced new permits to explore waters between South Australia, Victoria and Tasmania to establish new offshore fossil gas wells.

State of the Climate 2024[7]

WMO Greenhouse Gas Bulletin 2024[8]

The exploration and extraction of oil and gas are bad for our marine environment

The exploration and extraction of offshore oil and gas is an inherently risky process with the potential to impact on Tasmania's marine resources directly and indirectly at both the resource survey stage and during resource drilling and extraction. Risks and impacts include from oil and gas spills, air, light and sound pollution and the direct impacts of industrial processes on the surrounding marine area.

The main method of oil and gas surveying is through seismic testing. Marine seismic surveying generates high-intensity, low-frequency signals or sound that can travel vast distances (100s to 1000s of kilometres) with little loss in energy. Seismic sound negatively affects fisheries and the marine environment. The sound impacts current and future catch for commercial fisheries, and scientific studies have demonstrated impacts on various marine species, some of which are protected.

Seismic testing impacts of fisheries and the marine environment[9]

NOPSEMA environmental risk and management of offshore industry[10]

[7] https://www.csiro.au/en/research/environmental-impacts/climate-change/state-of-the-climate
[8] https://wmo.int/news/media-centre/greenhouse-gas-concentrations-hit-record-high-again
[9] https://www.aph.gov.au/Parliamentary_Business/Committees/Senate/Environment_and_Communications/SeismicTesting/Report
[10] https://www.nopsema.gov.au/offshore-industry/environmental-management

Impact and cause of oil spills[11]

Oil and gas are bad for our health

Fossil fuels cause hazardous air pollution that is implicated in 8.1 million deaths globally per year and is increasing the rates of asthma, heart disease, cancer, learning delays and poor pregnancy outcomes.

Climate change also places an extra burden on our healthcare system by increasing the need for healthcare services and by disrupting health service provision during and after extreme weather events.

Report: Fossil Fuels are a Health Hazard[12]

2. Is there a pathway away from offshore oil and gas?

In May 2024 researchers at University College London and the International Institute for Sustainable Development (IISD) published a research paper in the journal Science which showed that the world has enough fossil fuel projects planned to meet global energy demand forecasts to 2050 and governments should stop issuing new oil, gas and coal licences. The data offered what they said was "a rigorous scientific basis" for global governments to ban new fossil fuel projects and begin a managed decline of the fossil fuel industry, while encouraging investment in clean energy alternatives.

The report expanded on work by the International Energy Agency (IEA) in 2021 which had warned that no new fossil fuel projects could be approved from that point to remain compatible with the global goal to build a net zero energy system.

There are many existing technologies and emerging technologies that are being used to replace oil and gas for energy, most prominently via renewably sourced electricity. This includes electric transport, cooking and heating. There have also been recent advances in industrial heat pumps that could electrify industrial processes below 250°C and replace up to 17% of Australia's gas use, including in food and beverage processing and alumina refining, key uses of gas in Tasmania. Source: Institute for Energy Economics and Financial Analysis.

Victorian Government incentives for electric alternatives and phased gas ban in place

The Victorian government's "gas substitution roadmap[13]" is leading the way, incentivising households to invest in efficient electric alternatives to gas for home heating and hot water. Since January 1, 2024, new gas connections for new dwellings, apartment buildings, and residential subdivisions requiring planning permits are being phased out.

[11] https://www.noaa.gov/education/resource-collections/ocean-coasts/oil-spills
[12] https://cdn.prod.website-files.com/66791cf6e25a0b806f6a4e5c/66c306316cee46b3bf1ddbf6_Fossil_Fuels_Health_-2_compressed.pdf
[13] https://www.planning.vic.gov.au/guides-and-resources/strategies-and-initiatives/victorias-gas-substitution-roadmap

ACT Government ban on new gas connections

The ACT Government has commenced a regulation to prevent new fossil fuel gas network connections in most areas. The regulation stops new sources of emissions from fossil fuel gas use. It is part of a broader plan to phase out fossil fuel energy and electrify Canberra by 2045[14].
From 8 December 2023, new gas network connections will be prevented in:

- all residential, commercial and community facility land-use zones
- all residential use buildings in non-residential zones (Class 1-4 buildings, as classified under the National Construction Code).

Institute for Energy Economics and Financial Analysis[15]

3. Has offshore oil and gas exploration and development been banned elsewhere?

In March 2024 the NSW Government became the first Australian state to take steps to end destructive offshore fossil fuel exploration and development by legislating a ban on seabed petroleum and mineral mining in NSW coastal waters. The bill is designed to stop severe environmental damage that can result from offshore exploration and drilling including oil spills and greenhouse gas emissions.

4. Waratah Wynyard Council's position

Council, through its Integrated Council Environment Plan (ICEP) 2020-2030, has committed to undertake and promote climate action and increased ambition.

Councils Sustainability and Environmental Advisory Panel (SEAP) has identified offshore oil and gas exploration and development off Tasmania as a significant threat to our climate, our marine ecosystems and coastal communities and has requested that council act within its capacity to advocate for an end to offshore oil and gas exploration and development in Tasmanian and Commonwealth waters off Tasmania.

When offshore oil and gas projects are being developed, they have a requirement to consult with any stakeholders which may be affected by their operations. The Waratah Wynyard Council and north-west coast residents are regularly identified as 'relevant persons' that may be negatively affected by these proposed activities. The National Offshore Petroleum Safety and Environmental Management Authority (NOPSEMA) requires that any identified relevant persons are informed and offered further consultation regarding these projects. Impacts may include being exposed to an oil spill, visual or light pollution, or impacts on local industry or marine life through processes such as seismic testing and ongoing operations.

Though these proposals have identified that they could potentially negatively impact on north-west Tasmanian coastlines and communities, Waratah-Wynyard Council does not have the capacity to review or provide relevant comment on these detailed and highly complex proposals. The proponent for these oil and gas projects can fulfill their requirements for engaging the local government area by

[14] https://www.climatechoices.act.gov.au/energy/canberras-electrification-pathway/preventing-new-gas-network-connections
[15] https://ieefa.org/resources/industrial-heat-pumps-key-addressing-excess-gas-demand

identifying that they have provided council with information on the project and offered further consultation as required.

Recently when identified as a potential 'relevant person' by Esso Australia regarding proposed fossil fuel drilling in Commonwealth waters off Tasmania, Waratah Wynyard Council responded in opposition to the proposal due to the threat identified by SEAP and its commitment to ICEP.

Tasmanian planning authority legislation, that local government enacts (*Land Use planning and Approvals Act 1993),* ends at the coastline. The body of water to the 3 nautical mile limit offshore is under the jurisdiction of the Tasmanian state government. The Commonwealth have the legal jurisdiction for all waters that are more than 3 nautical miles off state coastlines.

5. Local Government Association of Tasmania position:

LGAT has consistently showed commitment to climate resilience and emission reduction at the Local Government level and through advocacy to the Federal and Tasmanian State Government.

As part of its 2024 priority actions LGAT is in the process of delivering the Statewide Local Government Climate Change program (in partnership with the State Government), which will build the capacity of the local government sector in Tasmania to respond to the impacts of a changing climate and reduce greenhouse gas emissions.

In July 2019 LGAT delivered a strong advocacy message regarding climate change, with the following motion passed by LGAT members:

> *That the LGAT call upon the Federal and Tasmanian State Governments and Parliaments urging them to:*
>
> *a. Acknowledge the urgency created by climate change that requires immediate and collaborative action across all tiers of government;*
>
> *b. Acknowledge that the world climate crisis is an issue of social and environmental injustice and, to a great extent, the burden of the frontline impacts of climate change fall on low income communities, vulnerable groups and future generations; and*
>
> *b) Facilitate emergency action to address the climate crisis, reduce greenhouse gas emissions and meet or exceed targets in the Paris Agreement.*

6. Tasmanian Government position

The Tasmania Government has set a policy agenda as a renewable leader and is well positioned to show its commitment to transition away from fossil gas use and its continued exploration and development in Tasmanian and Commonwealth waters. The Tasmanian Government have stated its commitment to transition away from fossil fuels and continue to lead the way in renewable energy in its Draft Future Gas Strategy and legislated 200% Renewable Energy Target.

The Climate Change (State Action) Amendment Act 2022 sets a new greenhouse gas emissions reduction target for Tasmania of net zero emissions, or lower, from 2030 and requires that the

Minister is to prepare a climate change action plan within 2 years after the commencement of this Act and at least every 5 years thereafter.

From section 5A(6) of the Act, the Minister, in developing a climate change action plan, is to take into account the following matters:

a) the objects of this Act;

b) Tasmania's emissions reduction target;

c) greenhouse gas emissions for Tasmania contained in the latest Greenhouse Gas Inventory;

d) the latest and best available science on the projected impacts of climate change on Tasmania;

e) consultation with relevant business, industry, scientific, environmental and community bodies, children and young people, local government, relevant unions, the peak body representing trade unions and the Tasmanian community;

f) evidence on the effectiveness of existing measures to reduce Tasmania's greenhouse gas emissions and adapt to the impacts of climate change;

g) the findings of the most recent statewide climate change risk assessment and emissions reduction and resilience plans;

h) developments in other jurisdictions;

i) any other matter the Minister considers relevant.

The Draft Tasmanian Future Gas Strategy[16] clearly articulates that, as Australia's leading renewable energy state, Tasmania has set a clear policy agenda to reduce greenhouse gas emissions, promote renewable energy and transition away from fossil fuels.

> There is, in short, an industry commitment to the decarbonisation of gas in Australia. As the national gas industry decarbonises, supported by ambitious emissions reduction commitments from all jurisdictions, it is clear that it is not a question of if, but rather of how and over what timeframe Tasmania moves to decarbonise its gas sector.
>
> *Draft Tasmanian Future Gas Strategy* 10

LGAT comment

There have not been previous resolutions directly on this matter. As noted in the background to the motion there was the July 2019 resolution calling on the Federal and State Governments to take immediate action on climate change. We also have two conflicting historical resolutions on fossil fuels, one calling for the reduction of fossil fuels and the other supporting increased use of natural gas:

[16] https://www.recfit.tas.gov.au/__data/assets/pdf_file/0008/489788/Draft_Future_Gas_Strategy_-_for_publication.pdf

- June 2009 - That the Local Government Association of Tasmania continue to investigate and promote initiatives to reduce the use of fossil fuels.
- July 2011 - That the Local Government Association of Tasmania lobby the State Government to continue to fund the roll out of Natural Gas to Tasmanian residents.

The 2019 resolution infers a position for the Tasmanian local government in calling for action of the other levels of government but does not provide a position or statement on the role or actions of local government in addressing climate change.

As noted in the background to the motion, LGAT has partnered with the State Government to deliver the Tasmanian Local Government Climate Capability Program Statewide. Following an extensive co-design process, the program in 2025 will focus on:

- Strengthening municipal climate governance through education and training of decision-makers and embedding climate into corporate systems.
- Enhancing knowledge sharing within the councils' climate officers' network.
- Providing targeted support to north-west councils.

In regard to the regulation of offshore oil and gas operations, the Commonwealth *Offshore Petroleum and Greenhouse Gas Storage Act 2006* establishes the framework. Under the Act it is Joint Authorities (typically the relevant Commonwealth and State/Territory Ministers) that are responsible for deciding whether to grant a petroleum title over commonwealth waters. For Tasmanian offshore waters, the Joint Authority is the commonwealth minister only[17]. The regulator for offshore oil and gas operations and greenhouse gas storage activities in commonwealth waters, the National Offshore Petroleum Safety and Environmental Management Authority)[18], approved plans in February 2025 for US oil and gas company ConocoPhillips to drill for gas off the coast of King Island[19].

The Paris Agreement is a legally binding international treaty on climate change. It entered into force on 4 November 2016 and was ratified by Australia on 9 November 2016. The overarching goal of the Paris Agreement is to limit "the increase in the global average temperature to well below 2°C above pre-industrial levels" and pursue efforts "to limit the temperature increase to 1.5°C above pre-industrial levels." According to the Intergovernmental Panel on Climate Change, "If investments in coal and other fossil infrastructure continue, energy systems will be locked into higher emissions, making it harder to limit warming to well below 2°C."[20] Australia's commitment to the Paris Agreement, known as our Nationally Determined Contribution (NDC) is to, "reduce greenhouse gas emissions 43% below 2005 levels by 2030."

[17]National Offshore Petroleum Titles Administrator, *Relevant Decision Makers,* accessed 13 March 2025, https://www.nopta.gov.au/legislation-and-compliance/legislative-overview/relevant-decision-makers.html
[18] National Offshore Petroleum Titles Administrator, *Regulatory Responsibilities,* accessed 13 March 2025, https://www.nopta.gov.au/legislation-and-compliance/legislative-overview/regulatory-responsibilities.html
[19] NOPSEMA 2025, *Activity – Otway Exploration Drilling Program,* accessed 13 March 2025, https://info.nopsema.gov.au/activities/528/show_public
[20] In *IPCC, 2022: Climate Change 2022: Mitigation of Climate Change. Contribution of Working Group III to the Sixth Assessment Report of the Intergovernmental Panel on Climate Change*, available at: https://www.ipcc.ch/report/ar6/wg3/

This motion is in two parts, the first requesting LGAT to establish a "Position Statement on offshore oil and gas exploration" and the second to advocate to the State and Federal Governments. Should members be supportive of the intent of the motion, then **it is requested that it be amended to remove part 1 of the motion to "establish a Position Statement on offshore oil and gas exploration".**

Part one of the motion would involve a significant body of technical work that largely sits outside of LGATs area of expertise. Further local (or state) government has no role in regulating offshore oil and gas operations and as such LGAT developing a position statement would be of little to no effect.

3. Items for discussion

3.1. Development Assessment Panels (DAPs)

Contact officer – Dion Lester, CEO

Local government rejects the updated DAPs Bill.

Suspend standing orders

Flinders Council / Central Coast Council

To suspend so much of standing orders to allow item 3.1 to be discussed.

Carried unanimously

Central Highlands Council / Devonport City Council

Local government rejects the updated DAPs Bill.

Carried

DRAFT

3.2. Development Assessment Panels (DAPs) fallback position

Contact officer – Dion Lester, CEO

Suspend standing orders

Central Coast Council / Kentish Council

To suspend so much of standing orders to allow item 3.2 to be discussed.

Carried

Latrobe Council / Clarence city Council

That the sector will have no fallback position.

Lost

Devonport City Council / Central Highlands Council

a) Limit call in criteria to Council as applicant.

Lost

Clarence City Council / George Town Council

b) Limit call in criteria to Council as applicant and Homes Tas.

Carried

DRAFT

4. Items for noting

4.1. Advocate

Local government reform and sector sustainability
Land use planning
Housing
Infrastructure
Emergency Management

4.1.1. Local Government Reform

Contact officer – Dion Lester, CEO

Central Coast Council / Waratah Wynyard Council

That Members note the update on the next stage of local government reform, associated with the Future of Local Government Review.

Carried unanimously

Background

On the 13 December 2024 the Minister for Local Government released its discussion paper outlining the proposed reforms to the *Local Government Act 1993*, the first step of the Government's Local Government Priority Reform Program 2024-26, developed in response to the Future of Local Government Review.

The full list of proposed reforms addresses Strategic Priority 1 (Lifting standards of professionalism, conduct, and integrity) and Strategic Priority 2 (Driving a high-performing, transparent, and accountable sector) from the reform program.

1 Legislating the Good Governance Principles.
2 Introducing serious misconduct provisions for Councillors.
3 Broadening Performance Improvement Direction provisions.
4 Introducing Temporary Advisors for Councils.
5 Clarifying Work Health and Safety obligations.
6 Mandating council learning and development obligations.
7 Introducing a contemporary role statement and a Charter for local government.
8 Improving the strategic planning and reporting frameworks.
9 Improving consistency in data collection and reporting methodologies.
10 Enhancing transparency of information in council rates notices.
11 Mandating internal audit for councils.

The consultation period is open until the 21 March 2025.

This was followed by the government releasing the Local Government Electoral Bill on 12 February, with submissions closing 4 April and then updated Meeting Procedures and General Regulations on 25 February, with submissions closing 1 April.

The consultation has been supported by a number of online briefings by the Office of Local Government (OLG).

While the majority of the reforms are welcomed and respond to sector feedback, this is a significant reform program for review. To support councils in the preparation of their feedback and to inform LGATs submissions, we hosted separate regional workshops for General Managers and Mayors in late February. Each session involved a presentation and question and answer session with the Office of Local Government, followed by a feedback session to inform our submission.

Budget Impact

Being undertaken within current resources.

Current Policy

Strategic Plan

- Advocate

2025 Focus Areas

Advocate

Local government reform and sector sustainability

4.1.2. Federal Election

Contact officer – Dion Lester, CEO

Central Coast Council / Waratah Wynyard Council

That Members note the update on the Australian Local Government Association's (ALGA) Federal Election campaign.

Carried unanimously

Background

The next Federal Election must be held by 17 May 2025.

Working in conjunction with its member state and territory associations, ALGA has developed a framework and resources for a national advocacy campaign that will run in the lead up to this election.

Based around the tagline of "Put Our Communities First", the goal is to secure additional federal funding that will support every council to play a bigger role delivering local solutions to national priorities.

All Australian councils have been asked to participate in this campaign to ensure a coordinated approach that will deliver the best possible outcomes.

The Put Our Communities First campaign will advocate for new federal funding to be distributed to all councils on a formula-basis, similar to the Commonwealth's Roads to Recovery Program, or the previous Local Roads and Community Infrastructure Program.

This will ensure that every council and community benefits and support local decision making based on local needs.

ALGA has developed a range of campaign resources that can be adapted and used by all councils to ensure a consistent and effective approach. LGAT will be distributing these to all councils ahead of the election.

The five national funding priorities have been determined by the ALGA Board – comprised of representatives from each of Australia's state and territory local government associations – and align with key national priorities.

These five funding priorities are:

- $1.1 billion per year for enabling infrastructure to unlock housing supply
- $500 million per year for community infrastructure
- $600 million per year for safer local roads
- $900 million per year for increased local government emergency management capability and capacity, and
- $400 million per year for climate change adaptation.

Further information on each of these priorities can be found on ALGAs campaign website.[21]

Budget Impact

Being undertaken within current resources.

Current Policy

Strategic Plan
Advocate

2025 Focus Areas

Advocate

Local government reform and sector sustainability

[21] https://putourcommunitiesfirst.com.au/

4.1.3. Planning

Contact officer – Dion Lester, CEO

Central Coast Council / Waratah Wynyard Council

That Members note the report on planning policy issues.

Carried unanimously

Progressing the Regional Land Use Strategies

Our advocacy work has continued seeking increased investment and engagement from the State Government on the Regional Land Use Strategies (RLUSs) updates. This advocacy has been successful, with the government committing in late February 2025 to appoint a new Program Manager within the Department of State Growth to lead the finalisation of the strategies, working with the respective regional coordinators, councils and importantly state government agencies to ensure timely provision of data and support.

The work LGAT led in late 2024 to support our advocacy and provide a pathway for supporting the progress of the RLUSs has been provided to the State Planning Office to support this new role. Broadly it involves:

- A proposed Regional Planning Framework (RPF) Purpose statement.
- Project coordination improvements.
- RPF Criteria work required.
- A proposed RLUS Template.

For those in our sector monitoring the state government announcements, it would have occurred to you that February 2025 was an extremely busy month for announcements on planning and building reform. This included:

- Extensions to the current urban growth boundary in the Southern Tasmanian Regional Land Use Strategy – 2 February.
- Automatic declaration of large renewable energy developments as Major Projects – 5 February.
- Changes to third party appeals to provide for only those that "are directly and adversely impacted by the planning decision" to be able to lodge an appeal – 7 February.
- Repeal of the *Local Government (Building and Miscellaneous Provisions) Act 1993* to streamline the approvals of subdivisions – 16 February.
- Investment in the regional strategies, as discussed above – 21 February.
- Releasing the updated Development Assessment Panels Bills – 26 February.
- Changes to Directors Determinations (under the *Building Act*) to now be prescribed in Regulations and also introduction of "deemed to satisfy" plumbing works – 26 February.

Development Assessment Panels (DAPs)

Members would be aware that in late November 2024 the Legislative Council did not support the DAP Bill. Instead, being very critical of the government approach to this issue. While this was a significant win for the sector, the government has been clear it would reintroduce an updated Bill "following further consultation". As noted above, an updated Bill is now out for consultation. LGAT was instrumental in securing an additional two weeks for the consultation period and also the provision of online workshops for planners.

Prior to this and to ensure the government appreciated our sectors position, we wrote to the Premier and Minister's for Planning and Local Government in late January 2025 outlining the sectors priorities for planning reform, noting regional land use strategies as the top priority and being essential to progress ahead of any discussion on DAPs.

Budget Impact

Being undertaken within current resources.

Current Policy

Strategic Plan

- Advocate

2025 Focus Areas

Advocate

Land use planning

Housing

DRAFT

4.1.4. Emergency management and recovery update

Contact officer – Bec Stevenson, Senior Policy Advisor

Central Coast Council / Waratah Wynyard Council

That Members note the update on the emergency management and recovery.

Carried unanimously

Background

We continue to engage with the Australian and Tasmanian Governments on emergency management and recovery issues of importance for local government. We are meeting monthly with Regional Coordinators from the State Emergency Service (SES) and Resilience and Recovery Tasmania (RRT). These regular meetings continue to support the working relationship between LGAT and staff members across both agencies. This also helps to ensure our advocacy is reflected in operations, reviews and reform.

Since our last report in November 2024, we have participated in several reviews and working groups relevant to emergency management and recovery on behalf of the sector, including:

- Evaluation panel member of the DPAC Evacuation Centre Resource Grants.
- Care for children during emergencies planning meeting.
- Volunteering Tasmania EV Crew update.
- Multi-agency planning Day with DPAC and SES.
- Primary Care Access in Evacuation Centre planning and consultation meetings.
- Cyber incident exercise planning meeting.
- Disaster Ready Fund Round 3 webinar.
- Recovery Working Group meeting.
- HPAI Recovery Planning Workshop.
- Recovery Partners Network Meeting.
- Emergency Management Collaboration Advisory Group meeting.
- Recovery Needs assessment consultation.
- Regional Evacuation Centre Guidelines consultation meeting.

Tasmanian Fire and Emergency Services (TFES) Reforms

The Tasmanian Government announced remodeled key reforms in early December 2024, which included:

- establishing the Tasmanian Fire and Emergency Services (TFES) in legislation, with the Tasmania Fire Service (TFS) and State Emergency Service (SES) as its main operational parts
- creating the role of Fire and Emergency Services Commissioner to lead TFES
- establishing the State Fire and Emergency Services Commission as the governing body for TFES, with a skills-based board
- introducing a volunteer charter in legislation
- updating existing laws with modern, principle-based legislation.

It is important to note that these reforms will not address the current funding model for TFS and SES. Councils will still be required to collect the Fire Levy and support municipal SES units as required under the Emergency Management Act 2006.

A webinar for council officers was held in December 2024, providing an overview of the proposed changes. Consultation closed on 28 February 2025 on the establishment of the TFES reforms. Our submission on behalf of the sector provided support for the proposed changes with representation of local government required on the new committee structure. This representation continues to acknowledge the important role local government plays in funding and supporting SES units and collecting the Fire Service Levy.

LGAT's Emergency Management and Recovery Review Project – Phase 1 and Phase 2

In 2024 we were successful in gaining funding under round five of the Federal Government's Natural Disaster Risk Reduction Grants Program. This funding has delivered the first phase of Tasmanian Local Government Emergency Management and Recovery Review, with 18 councils participating. All council visits have been completed by the review team of WLF Account and Advisory and reports are being finalised with completion expected in line with the funding deed of 31 March 2025.

The Department of Premier and Cabinet has funded an extension to this initiative, allowing a further nine councils to take part in Phase 2. An invitation to participate has been issued to General Managers with the aim for phase 2 to be completed by June 2025.

Local Government Emergency Management Learning Network

We have been working with DPAC and SES to create learning and developing opportunities in the emergency management and recovery.

We have established a Local Government Learning Network, a collaboration between SES, DPAC and LGAT. This network is a resource for local government emergency management and recovery practitioners.

Activities scheduled to date include webinars focussing on Councils in Emergency Management and Councils in Recovery. Each webinar is an hour long and will be recorded with the recording available on the LGAT Member Portal. Over the course of the year, the network will provide opportunities for webinars, training, resources and face to face learning, with the program of activities to be released and published on our website over the coming months.

Budget Impact

Being undertaken within current resources

Current Policy

Strategic Plan

- Advocate

2025 Focus Areas

Advocate

Emergency Management

DRAFT

4.2. Member Services

LGAT Procurement
Networks, learning and development

4.2.1. Procurement update

Contact Officer – Georgia Palmer, Director Sector Services

Central Coast Council / Waratah Wynyard Council

That members note the following update on procurement support for councils.

Carried unanimously

Background

LGAT Procurement aims to help councils undertake best practice procurement and deliver value for money for their communities.

LGAT Procurement is now in its third year of implementing its five-year business plan. Implementation to date has been successful, delivering on several of the most significant initiatives, whilst also supporting a greater than predicted increase in the use of existing panels and other LGAT procurement products and services.

LGAT Procurement Civil Works Panel

The Tasmanian minor and major civil works and civil works material panels were launched on 1 September 2024.

An update on project purpose was provided in the September 2024 General Meeting agenda and presentation.

Council engagement with the panel arrangements has been positive. To the end of February 2025, 16 Request for Quotations have been posted from both large and small councils. The requests have been for varied works from spray sealing and road stabilisation to roundabout construction, landfill cell development, footpath repairs, netball and pickleball court resurfacing, intersection treatment and storm water upgrades. Councils have been supported in using the panels and council officers and suppliers have commented on the ease of the approach.

A tender refresh is being conducted by LGAT at the request of councils and suppliers to allow for new entrants onto the panels. The timing of the refresh is as follows:

Supplier webinar/information session	1 April 2025
Tenders open	28 April 2025
Tenders close	26 May 2025
Notify tenderers of outcome	7 July 2025

Tenderers will be required to meet the same terms and conditions and be subject to the same evaluation criteria as in the initial request for tender.

Energy Tender

LGAT procurement facilitated an energy tender for interested Tasmanian councils in late 2024. The scope of the tender included small sites, large sites and public lighting.

Whilst energy prices have increased since councils last entered energy contracts, the new energy contracts will save councils $6.4 million over the term of the contract compared to the standing tariff.

LGAT continues to liaise with the retailers to ensure a smooth transition onto the new contracts as existing contracts expire.

Procurement Training

LGAT Procurement understands the importance of providing council officers engaged in tenders, contracts and other procurement activities with professional training opportunities targeted at updating and enhancing skills. Such training not only benefits the individuals, but in turn the councils and communities that they work for.

To this end, LGAT Procurement offers a range of procurement related courses specifically designed for Tasmanian local government officers. The courses are delivered by specialist procurement experts.

As a new LGAT procurement offering, several courses are currently scheduled and are now available to book in regional locations or in some cases online. These include:

- Procurement Basic Awareness
- Procurement Essentials and
- Contract Management

In addition, LGAT Procurement can deliver in house training at council offices on request.

For further information contact Deborah.leisser@lgat.tas.gov.au or visit LGAT events calendar.

Budget Implications

The energy consultancy costs have been budgeted for as part of the project.

Current Policy

Strategic Plan

- Sector services

2025 Focus Areas

Member services

LGAT Procurement

4.2.2. Events and Professional Development overview *

Contact Officer – Georgia Palmer, Director Sector Services

Central Coast Council / Waratah Wynyard Council

That Members note the update on events and professional development.

Carried unanimously

Climate Change Forum

The Climate Change Forum was held on the 12 March 2025 at Wrest Point in Hobart.

This forum focussed on how we can achieve ambitious climate action and included speakers such as internationally recognised expert in climate variability and change, Joelle Gergis, climate policy professional Nina Rogers, Palawa man Jason Smith, Sharon Terry from Greater Shepparton City Council and a live debate.

Webinars

In response to elected members feedback, we will also be running several online webinars on topical issues for elected members throughout the year. Members have been asked to subscribe to our newsletter to keep informed on when these webinars will be held.

Annual Conference

We have confirmed that the 2025 Annual Conference will be held on November 20 and 21 at the Grand Chancellor Hobart. We will be implementing some changes this year in response to past conference feedback, including hosting the dinner at a new location and changing the conference days to Thursday and Friday.

Learning and Development

At the Premier's Local Government Council (PLGC) on 12 December 2024 the Office of Local Government (OLG) provided a paper recommending the transition of the administrative and operational responsibility for the Local Government Learning and Development Framework to LGAT. LGAT GMC members noted that they are strong supporters of more capable and skilled councillors through the learning and development framework. However, they were very clear to the Minister for Local Government and the Premier that this transition would imposes a new cost onto the sector. LGAT's preferred route was for the State Government to provide more substantial seed funding to build support within the sector. We have sought this in our 2025-26 State Budget Priority Statement[22] that calls for $400,000 over two years. If our budget submission is not successful, we will be asking the sector to support an ongoing adjustment to LGAT's budget at the June Annual General Meeting.

Meanwhile, we are progressing the transition of the learning and development framework to LGAT with the following actions:

[22] Available at: www.lgat.tas.gov.au >Policy and advocacy >Reports and submissions

- The LGAT GMC will form a sub-committee to replace the existing governance group that will comprise elected members and senior officers filled through an expression of Interest process.
- LGAT is now managing the Online Modules and the Learn to Lead website (www.learntolead.tas.gov.au).
- A new Learning Management System has been scoped, and a shortlist is being developed to replace the current Matrix LMS system, which the sector has noted is clunky and hard to use.

Communities of Practice

We are holding a follow-up session for Mayors on psychological safety on 28 March. This session will build on the Mayor's discussion from 13 December 2024 and enable sharing of their perspectives from the last three months.

Upcoming Events

Please refer to **Attachment 4.2.2** for upcoming events.

Budget Impact

Being undertaken within current resources.

Current Policy

Strategic Plan

- Sector Services

2025 Focus Areas

Advocate

Local government reform and sector sustainability

Member services

Networks, learning and development

DRAFT

4.3. Sector Support

Elected member health and safety
Tasmanian Development Manual
Health and wellbeing
Community safety
Safeguarding children
Climate change
Open spaces
Environment regulation

4.3.1. Workplace Health and Safety Review *

Contact Officer – Dion Lester, CEO

Central Coast Council / Waratah Wynyard Council

That Members note the implementation of the Workplace Health and Safety Review of Elected Representatives and that this item will be closed.

Carried unanimously

Background

During the last period work has continued on implementation of the Workplace Health and Safety Review of Elected Representatives (WH&S Review) recommendations.

The Implementation Plan, as at **Attachment 4.3.1** to this item, outlines the work that has progressed since the last meeting.

In particular, we note:

- The development of a process and sanctions for serious misconduct.
- The provisions of further support documentation (policies and procedures) from LGAT on workplace health and safety for elected representatives.
- The commencement of the community education campaign, 'lift the tone'.

Only a small number of recommendations from the original 2022 report remain and they are on hold pending other activities. Given this and also that elected member health and safety has been picked up as a key focus area in the LGAT 2025 Annual Plan, the implementation plan for the original WH&S Review will be closed.

Budget Impact

Implementation of the recommendations is being undertaken with LGAT's existing resources.

Current Policy

Strategic Plan

- Advocate

2025 Focus Areas

Sector support

Elected member health and safety

4.3.2. Lift the Tone

Contact Officers – Belinda Blackburn, Communications Manager and Dion Lester, CEO

Central Coast Council / Waratah Wynyard Council

That Members note the progress on the Lift the Tone campaign.

Carried unanimously

Background

In mid-2024 LGAT began scoping a community awareness campaign to address the increasing incidences of bullying and harassment directed towards elected representatives and council staff from members of the public.

The aim of the campaign is to:

- Promote a culture of respectful communication and interaction with elected members and council staff.
- Reduce harassment and abuse by encouraging constructive and solution-oriented public discourse.
- Emphasise shared responsibility in improving the tone of community engagement, fostering stronger community connections and better local governance.

To support the campaign with real-world data, LGAT conducted a survey with elected representatives to seek a better understanding of their experiences of bullying, harassment and intimidation. The survey was emailed to all elected representatives on 17 September 2024, with a response rate of 36%.

Survey responses were received from a wide range of elected representatives across all three regions. When asked if they had experienced abuse or intimidation from members of the community during the last two years, 78% of respondents indicated that they had to varying degrees. It was identified that the most common place for this to occur was social media (47%), followed by verbally in public (37%). The main triggers for this type of behaviour were identified as differences of opinion, planning decisions, and council fees and policies.

We asked elected representatives to share what kind of impact abuse, intimidation and other poor behaviour has had on them. Many respondents indicated that they avoid social media completely or choose to have limited interaction. The survey also identified that many family members of elected representatives find these interactions upsetting. In extreme circumstances, respondents noted that they had received death threats, been followed in their vehicle, sought counselling, and installed extra security at their homes. When asked how often they feel at risk when fulfilling their role, 37% of survey respondents indicated this was a frequent or occasional occurrence. Bullying, harassment and intimidation were also identified as reasons for not standing for re-election in 2026 for some respondents.

The above data and stories shared in this survey will form a key component of the campaign.

The campaign will launch on 27 March 2025 and includes short video testimonials of elected representatives sharing their experiences, earned media, resources and a social media campaign. LGAT invites all elected representatives and councils to support the campaign once it has launched.

Budget Impact

Being undertaken with LGAT's existing resources.

Current Policy

Strategic Plan

- Advocate

2025 Focus Areas

Sector support

Elected member health and safety

4.3.3. Safeguarding Children update

Contact Officers – Bec Stevenson, Senior Policy Advisor, Lynden Leppard, Safeguarding Children Project Manager and Jesscia Beckett, Safeguarding Children Project Officer

Central Coast Council / Waratah Wynyard Council

That Members note the update on Safeguarding Children activities.

Carried unanimously

Background

We have been actively contributing to the development of the revised *Change for Children Strategy* through both a formal submission[23], and direct advocacy efforts with the Department of Premier and

[23] https://www.lgat.tas.gov.au/__data/assets/pdf_file/0028/1742707/LGB0CA~1.PDF

Cabinet. We played an active role in the redrafting process, ensuring the revised strategy released in December 2024 highlights the vital role councils play in promoting overall safety, particularly of children, by providing and facilitating programs for children and young people. We continue to advocate for the strategy to acknowledge the unique roles that all councils play in their communities.

LGAT's safeguarding children Teams network now has over 100 members with 28 councils represented. A workplan has been developed for 2025 that focuses on three areas – policy and advocacy, learning and development, and resources and support. A learning and development program has been released for the first half of 2025 with webinars, workshops and training provided on topics identified through a needs analysis survey in late 2024 with the network. We have scheduled a number of regional events for officers and Elected Members in the first half of 2025. A full list of the learning and development workshops are available on our website.

We continue to offer support to individual councils in the developing plans for child safety compliance. A recent update to our website [24]and member portal[25] page includes recordings of webinars and template documents for council use.

Budget Impact

Being undertaken within current resources

Current Policy

Strategic Plan

- Advocate
- Sector services

2025 Focus Areas

Sector support

Safeguarding children

[24] https://www.lgat.tas.gov.au/lgat-advocacy/safeguarding-children-and-young-people
[25] https://www.lgat.tas.gov.au/member-portal/community/safeguarding-children-and-young-people

4.3.4. Climate change update

Contact Officers – Hannah Snape, Program Manager

Central Coast Council / Waratah Wynyard Council

That Members note the update on climate change activities.

Carried unanimously

Background

At the end of 2024 the co-design of the Tasmanian Local Government Climate Capability Program drew to a close. This process engaged over 100 council staff, executives and elected representatives over a period of 8 months, to understand the challenges and opportunities for climate action by councils.

Following the broader engagement activities, the program's working group met in Launceston to review the outcomes of the co-design and prioritise the program deliverables for 2025. This resulted in a suite of recommendations for the implementation of the Climate Capability Program in 2025.

The Phase One report is yet to be formally approved by the program's steering committee. However, priorities outlined by the working group for delivery in 2025 include:

- Supporting councils to navigate new or updated climate change data, such as the updated climate change factors in the Australian Rainfall and Runoff Guidelines.
- Strengthening municipal climate governance.
- Expanding knowledge sharing opportunities for the council's climate network.
- Supporting and inspiring action in northwest councils.
- Continued engagement with the local government sector.

Once approved, this significant program of work will be commenced. Support and engagement from all levels of councils for program activities will be critical to ensuring program success and maximising benefits from the state government funding.

Budget Impact

Being undertaken with grant funds from the Tasmanian Government.

Current Policy

Strategic Plan

- Advocate

2025 Focus Areas

Sector support

Climate change

4.3.5. Policy update

Contact Officer – Ben Morris, Policy Director

Central Coast Council / Waratah Wynyard Council

That the Members note the update on cat management and avian influenza.

Carried unanimously

Cat management

Tasmania's five-year Cat Management Plan 2017-22 is intended to be a comprehensive and collaborative approach to managing cats in Tasmania. The plan has supported regional working groups that include councils, State Government and non-government cat management groups.

An update for the next period, 2024-29, is currently under development and LGAT has been engaging with regional cat management groups and the Department of Natural Resources and Environment (NRE). The largest challenge for the updated Cat Management Plan will be resourcing, with the state government signalling across the board that funding is extremely tight.

We have been advocating strongly for an engagement approach with local government at the centre given the critical role that councils play in cat management. LGAT's intention is that NRE's engagement can cover as many areas of the November 2024 General Meeting Resolution (see below) as possible, to provide for an efficient use of councils' resources.

> *That LGAT establishes a review to determine whether or not to develop a sector wide position on cat management and that the determination of any such position be presented to the State Government addressing issues including, but not limited to:*
>
> 1. *The recognition that cat management is a shared responsibility across all levels of government, business and the community;*
> 2. *Avenues to increase community awareness, participation and commitment by pet cat owners to manage cats responsibly;*
> 3. *Assessment of best practice techniques in relation to the planning, management and control of stray and feral cats;*
> 4. *Improved knowledge about feral, stray and domestic cats to better inform management;*
> 5. *Minimising the impacts of cats in areas with important conservation values and agricultural assets;*
> 6. *Undertake legislative change and the provision of resources to create an effective framework for managing cats, including resourcing for cat management facilities;*

7. *Review the roles and responsibilities of local and state governments in relation to cat management and resource allocation"; and*
8. *That the state government recognise their role in providing funding for local government.*

High pathogenicity avian influenza

Similar to human flu, there are many strains of bird flu. Less serious ones are described as low pathogenicity (i.e. ability to cause disease) and more serious ones are known as high pathogenicity avian influenza.

The latter strains, particular, the H5N1 strain, are of most concern as they have caused widespread disease and death in birds and other animals, including marine mammals, in many parts of the world. The H5 strain would have widespread impacts on wild birds and marine animals, farmed and backyard birds and urban birds like ducks and seagulls. As avian flu spreads from wild birds it is not possible to prevent its spread to Tasmania and has been detected in Antarctica. The current Victorian outbreak is a different strain (H7N8) that is high pathogenicity but is able to be eradicated through strict control.

NRE, building on national efforts, has recently released its Tasmanian Avian Influenza Readiness and Response Plan[26]. Supporting this statewide plan, we have been engaging with NRE on issues around council response, communication and waste management. Our advocacy helped to secure a workshop with the waste management sector, including councils, to work through the challenges of managing infected and dead animals. A further workshop is planned for land managers, including councils.

Autumn sees a major decrease in bird migration, so the likelihood of an outbreak will decrease. However, councils must still be vigilant and are encouraged to report sudden or large numbers (more than five) of sick or dead birds or other animals to the Emergency Animal Disease Hotline 1800 675 888. Do not touch sick or dead birds or other animals.

Budget Impact

Being undertaken within current resources.

Current Policy

Strategic Plan

- Advocate

[26] Available at: https://nre.tas.gov.au/biosecurity-tasmania/animal-biosecurity/animal-health/poultry-and-pigeons/bird-flu

4.3.6. Sector support update

Contact Officer – Ben Morris, Policy Director

Central Coast Council / Waratah Wynyard Council

That the Members note the update on the Health and Wellbeing program, the CCTV Regional Towns Security Cameras Project and the Development Manual.

Carried unanimously

Health and Wellbeing Network

We have a funding agreement with the Public Health Service (PHS) in the Department of Health with the purpose of building and supporting a statewide community health and wellbeing network between all councils, LGAT and PHS. We continue to work with PHS to deliver the Health and Wellbeing Network.

In February 2025 the first of three online workshops was held with Jeder Institute to build on the 2024 sessions. This workshop was titled, "Co-collaborate, Co-production – Co everything! Discover why collaboration and co-design is key to success in your community. How to work with your team and community to design what is next for your work." Twenty-four council staff attended the training representing 16 councils.

On Wednesday 13 November 2024 LGAT hosted a one-day forum on Health and Wellbeing. The theme for this event was *Liveable Places, Thriving Communities*. Health and wellbeing is at the heart of local government and we wanted to highlight how the services provided by councils contribute to the broad systems of wellbeing in communities.

Highlights of the forum included the keynote speakers, who explored how community-led approaches are the best choice for building resilient and liveable communities. One of these was Glen Eira City Council, from Victoria, who spoke how their engagement work established key priorities, highlighted the community's value of quality of life and place-based solutions.

Two Tasmanian councils provided important case studies:

- Brighton Council spoke about taking an Asset Based Community Development approach to sustainable community-driven development.
- West Tamar Council shared the process of developing the council's new Community Health and Wellbeing Plan 'What's Best for the West Tamar?'

Regional Towns CCTV Project

LGAT is delivering a $4 million program to increase community safety in regional towns with closed circuit security cameras (CCTV) that is funded by the Tasmanian Government. Tasmania Police are actively supporting the project, and we have met with senior staff and the statewide management MoU is at final review with Tasmania Police legal. The MoU will be signed by participating councils and Tasmania Police as a standardised statewide agreement.

In 2025 we continue with the final roll out, that will see installation and upgrading of new CCTV infrastructure in 23 of the qualifying 24 councils (one council opted to not participate). In our 2025–26 State Budget Priority Statement there was a substantial CCTV expansion; a total of $3.78 million to expand the statewide system, targeting high priority camera installations and including integration of Urban councils ($1.8 million), enhanced redundancy and remote system maintenance ($0.36 million) and expanding the system to allow for statewide remote access for Tasmanian Police ($1.5 million).

Tasmanian Development Manual Project

Our Tasmanian Development Manual (TDM) project is progressing well. It will include a range of pre-application design guidelines and post approval construction standards. The manual will be a convenient single reference point for proponents in informing development proposals and post-approval compliance requirements for construction.

The draft manual, after review by the project Steering Committee, is currently with councils, key State Government agencies and utilities for review. The project, through the consultant is undertaking broader engagement through presentations at conferences of the Institute of Public Works Engineers (IPWEA).

Budget Impact

Health and wellbeing – being undertaken with external grant funds from the Tasmanian Government via the Public Health S

Regional Towns CCTV - being undertaken with external grant funds from the Tasmanian Government ($4 million), via the Department of State Growth.

Tasmanian Development Manual - being undertaken with external grant funds from the Tasmanian Government, through the State Planning Office and previous council contributions to the maintenance of the Tasmanian Municipal Standards.

Current Policy

Strategic Plan

- Advocate

DRAFT

2025 Focus Areas

Sector support
- Tasmanian Development Manual
- Programs

5. Other business and close

5.1. Next meetings and close

That Members note the next general meeting will include the Annual General Meeting and will be held in Launceston on 25 July 2025.

2025		
March		
19 March	General Managers Workshop	RACV Hobart
20 March	General Managers Workshop	RACV Hobart
April		
2 April	General Meeting	Crowne Plaza Hobart
3 April	Mayor and Deputy Mayors Workshop	Crowne Plaza Hobart
May		
15 May	General Management Committee meeting	Launceston
June		
5 June	Diversity Training for Elected members	To be confirmed
July		
25 July	General Meeting & Annual General Meeting	Launceston
26 July	Elected Members Workshop	Launceston
August		
21 August	General Management Committee meeting	Launceston
September		
3-4 September	General Managers Workshop	White Sands Resort
17 September	Mayors Workshop	Paranaple Convention Centre, Devonport

18 September	Policy Event	Paranaple Convention Centre, Devonport
October		
16 October	General Management Committee meeting	Online
November		
20 November	General Meeting & Annual Conference	Hobart, Hotel Grand Chancellor
21 November	Annual Conference	Hobart, Hotel Grand Chancellor
December		
11 December	General Management Committee meeting and PLGC (to be confirmed)	Hobart

There being no further discussion the Acting President declared the meeting closed at 1:00 pm.

DRAFT

1.1 Confirmation of minutes

Central Highlands / Kingborough

That the minutes of the meeting held on 21 November 2024, as circulated, be confirmed.



Participant	Response	Weight
Break O'Day Council	For	1
Brighton Council	For	2
Burnie City Council	For	3
Central Coast Council	For	3
Central Highlands Council	For	1
Circular Head Council	For	1
Clarence City Council	For	4
Derwent Valley Council	For	2
Devonport City Council	For	3
Dorset Council	For	1
Flinders Council	For	1
George Town Council	For	1
Glamorgan/Spring Bay Council	For	1
Glenorchy City Council	For	4
Hobart City Council	For	4

Huon Valley Council	For	2
Kentish Council	For	1
Kingborough Council	For	4
King Island Council	[No Response]	1
Latrobe Council	For	2
Launceston City Council	For	4
Meander Valley Council	For	3
Northern Midlands Council	For	2
Sorell Council	For	2
Southern Midlands Council	For	1
Tasman Council	For	1
Waratah - Wynyard Council	For	2
West Coast Council	For	1
West Tamar Council	For	3
President LGAT	[No Response]	0
CEO LGAT	[No Response]	0
Policy Director LGAT	[No Response]	0
Guest 1 LGAT	[No Response]	0
Guest 2 LGAT	[No Response]	0

1.3 Confirmation of agenda

Kingborough / Huon

That consideration be given to the agenda items and the order of business.

1. For 60
2. Against 0
3. Abstain 0

Participant	Response	Weight
Break O'Day Council	For	1
Brighton Council	For	2
Burnie City Council	For	3
Central Coast Council	For	3
Central Highlands Council	For	1
Circular Head Council	For	1
Clarence City Council	For	4
Derwent Valley Council	For	2
Devonport City Council	For	3
Dorset Council	For	1
Flinders Council	For	1
George Town Council	For	1
Glamorgan/Spring Bay Council	For	1

Glenorchy City Council	For	4
Hobart City Council	For	4
Huon Valley Council	For	2
Kentish Council	For	1
Kingborough Council	For	4
King Island Council	[No Response]	1
Latrobe Council	For	2
Launceston City Council	For	4
Meander Valley Council	For	3
Northern Midlands Council	For	2
Sorell Council	For	2
Southern Midlands Council	For	1
Tasman Council	For	1
Waratah - Wynyard Council	For	2
West Coast Council	For	1
West Tamar Council	For	3
President LGAT	[No Response]	0
CEO LGAT	[No Response]	0
Policy Director LGAT	[No Response]	0
Guest 1 LGAT	[No Response]	0
Guest 2 LGAT	[No Response]	0

1.4 Follow up of motions

Flinders / Central Highlands

That Members note the following report.



Participant	Response	Weight
Break O'Day Council	For	1
Brighton Council	For	2
Burnie City Council	For	3
Central Coast Council	For	3
Central Highlands Council	For	1
Circular Head Council	For	1
Clarence City Council	For	4
Derwent Valley Council	For	2
Devonport City Council	For	3
Dorset Council	For	1
Flinders Council	For	1
George Town Council	For	1

Glamorgan/Spring Bay Council	For	1
Glenorchy City Council	For	4
Hobart City Council	For	4
Huon Valley Council	For	2
Kentish Council	For	1
Kingborough Council	For	4
King Island Council	[No Response]	1
Latrobe Council	For	2
Launceston City Council	For	4
Meander Valley Council	For	3
Northern Midlands Council	For	2
Sorell Council	For	2
Southern Midlands Council	For	1
Tasman Council	For	1
Waratah - Wynyard Council	For	2
West Coast Council	For	1
West Tamar Council	For	3
President LGAT	[No Response]	0
CEO LGAT	[No Response]	0
Policy Director LGAT	[No Response]	0
Guest 1 LGAT	[No Response]	0
Guest 2 LGAT	[No Response]	0

1.5 President's report

Meander / Kentish

That Members note the report on the President's activity from 30 October 2024 to 14 March 2025.

1. For 60
2. Against 0
3. Abstain 0

Participant	Response	Weight
Break O'Day Council	For	1
Brighton Council	For	2
Burnie City Council	For	3
Central Coast Council	For	3
Central Highlands Council	For	1
Circular Head Council	For	1
Clarence City Council	For	4
Derwent Valley Council	For	2
Devonport City Council	For	3
Dorset Council	For	1
Flinders Council	For	1
George Town Council	For	1
Glamorgan/Spring Bay Council	For	1
Glenorchy City Council	For	4

Hobart City Council	For	4
Huon Valley Council	For	2
Kentish Council	For	1
Kingborough Council	For	4
King Island Council	[No Response]	1
Latrobe Council	For	2
Launceston City Council	For	4
Meander Valley Council	For	3
Northern Midlands Council	For	2
Sorell Council	For	2
Southern Midlands Council	For	1
Tasman Council	For	1
Waratah - Wynyard Council	For	2
West Coast Council	For	1
West Tamar Council	For	3
President LGAT	[No Response]	0
CEO LGAT	[No Response]	0
Policy Director LGAT	[No Response]	0
Guest 1 LGAT	[No Response]	0
Guest 2 LGAT	[No Response]	0

1.6 Chief Executive Officer report

Northern Midlands / West Coast

That Members note the report on the CEO's activity from 30 October 2024 to 14 March 2025.



Participant	Response	Weight
Break O'Day Council	For	1
Brighton Council	For	2
Burnie City Council	For	3
Central Coast Council	For	3
Central Highlands Council	For	1
Circular Head Council	For	1
Clarence City Council	For	4
Derwent Valley Council	For	2
Devonport City Council	For	3
Dorset Council	For	1
Flinders Council	For	1
George Town Council	For	1
Glamorgan/Spring Bay Council	For	1

Glenorchy City Council	For	4
Hobart City Council	For	4
Huon Valley Council	For	2
Kentish Council	For	1
Kingborough Council	For	4
King Island Council	[No Response]	1
Latrobe Council	For	2
Launceston City Council	For	4
Meander Valley Council	For	3
Northern Midlands Council	For	2
Sorell Council	For	2
Southern Midlands Council	For	1
Tasman Council	For	1
Waratah - Wynyard Council	For	2
West Coast Council	For	1
West Tamar Council	For	3
President LGAT	[No Response]	0
CEO LGAT	[No Response]	0
Policy Director LGAT	[No Response]	0
Guest 1 LGAT	[No Response]	0
Guest 2 LGAT	[No Response]	0

1.7 Annual Plan update

Devonport / Central Highlands

That Members note the report against the Annual Plan.

1. For 60
2. Against 0
3. Abstain 0

Participant	Response	Weight
Break O'Day Council	For	1
Brighton Council	For	2
Burnie City Council	For	3
Central Coast Council	For	3
Central Highlands Council	For	1
Circular Head Council	For	1
Clarence City Council	For	4
Derwent Valley Council	For	2
Devonport City Council	For	3
Dorset Council	For	1
Flinders Council	For	1
George Town Council	For	1
Glamorgan/Spring Bay Council	For	1
Glenorchy City Council	For	4

Hobart City Council	For	4
Huon Valley Council	For	2
Kentish Council	For	1
Kingborough Council	For	4
King Island Council	[No Response]	1
Latrobe Council	For	2
Launceston City Council	For	4
Meander Valley Council	For	3
Northern Midlands Council	For	2
Sorell Council	For	2
Southern Midlands Council	For	1
Tasman Council	For	1
Waratah - Wynyard Council	For	2
West Coast Council	For	1
West Tamar Council	For	3
President LGAT	[No Response]	0
CEO LGAT	[No Response]	0
Policy Director LGAT	[No Response]	0
Guest 1 LGAT	[No Response]	0
Guest 2 LGAT	[No Response]	0

2.1 Motion – Adoption of 7 star energy efficiency requirements

City of Hobart / Glenorchy

That the Local Government Association of Tasmania lobby the Tasmanian Government to adopt the 7 star energy efficiency requirements of the National Construction Code 2022 to provide more comfortable homes with lower energy running costs for Tasmanians.



Participant	Response	Weight
Break O'Day Council	Against	1
Brighton Council	For	2
Burnie City Council	Against	3
Central Coast Council	Against	3
Central Highlands Council	Against	1
Circular Head Council	Against	1
Clarence City Council	For	4
Derwent Valley Council	Against	2
Devonport City Council	Against	3
Dorset Council	Against	1
Flinders Council	Against	1
George Town Council	Against	1
Glamorgan/Spring Bay Council	Against	1
Glenorchy City Council	For	4

Hobart City Council	For	4
Huon Valley Council	For	2
Kentish Council	Against	1
Kingborough Council	For	4
King Island Council	[No Response]	1
Latrobe Council	Against	2
Launceston City Council	For	4
Meander Valley Council	Against	3
Northern Midlands Council	For	2
Sorell Council	Against	2
Southern Midlands Council	Against	1
Tasman Council	Against	1
Waratah - Wynyard Council	Against	2
West Coast Council	Against	1
West Tamar Council	Against	3
President LGAT	[No Response]	0
CEO LGAT	[No Response]	0
Policy Director LGAT	[No Response]	0
Guest 1 LGAT	[No Response]	0
Guest 2 LGAT	[No Response]	0

2.2 Motion – Funding for line marking on local government roads

City of Hobart / Devonport

That the Local Government Association of Tasmania lobby the Tasmanian Government to urgently increase the allocation of state-based funds for line marking on local government roads to more closely align with the quantum required to meet safe operating standards.

1. For 60
2. Against 0
3. Abstain 0

Participant	Response	Weight
Break O'Day Council	For	1
Brighton Council	For	2
Burnie City Council	For	3
Central Coast Council	For	3
Central Highlands Council	For	1
Circular Head Council	For	1
Clarence City Council	For	4
Derwent Valley Council	For	2
Devonport City Council	For	3
Dorset Council	For	1
Flinders Council	For	1
George Town Council	For	1
Glamorgan/Spring Bay Council	For	1

Glenorchy City Council	For	4
Hobart City Council	For	4
Huon Valley Council	For	2
Kentish Council	For	1
Kingborough Council	For	4
King Island Council	[No Response]	1
Latrobe Council	For	2
Launceston City Council	For	4
Meander Valley Council	For	3
Northern Midlands Council	For	2
Sorell Council	For	2
Southern Midlands Council	For	1
Tasman Council	For	1
Waratah - Wynyard Council	For	2
West Coast Council	For	1
West Tamar Council	For	3
President LGAT	[No Response]	0
CEO LGAT	[No Response]	0
Policy Director LGAT	[No Response]	0
Guest 1 LGAT	[No Response]	0
Guest 2 LGAT	[No Response]	0

2.3 Motion - Public open space contributions

Brighton / Flinders

That the Local Government Association of Tasmania lobby the Minister for Housing, Planning and Consumer Affairs and the State Planning Office to work with Councils to introduce an Open Space Policy that includes contribution requirements for all forms of subdivision including strata developments.



Participant	Response	Weight
Break O'Day Council	For	1
Brighton Council	For	2
Burnie City Council	For	3
Central Coast Council	Against	3
Central Highlands Council	For	1
Circular Head Council	For	1
Clarence City Council	For	4
Derwent Valley Council	For	2
Devonport City Council	For	3
Dorset Council	For	1
Flinders Council	For	1
George Town Council	For	1
Glamorgan/Spring Bay Council	For	1

Glenorchy City Council	For	4
Hobart City Council	For	4
Huon Valley Council	For	2
Kentish Council	For	1
Kingborough Council	For	4
King Island Council	[No Response]	1
Latrobe Council	For	2
Launceston City Council	For	4
Meander Valley Council	For	3
Northern Midlands Council	For	2
Sorell Council	For	2
Southern Midlands Council	For	1
Tasman Council	For	1
Waratah - Wynyard Council	For	2
West Coast Council	For	1
West Tamar Council	Against	3
President LGAT	[No Response]	0
CEO LGAT	[No Response]	0
Policy Director LGAT	[No Response]	0
Guest 1 LGAT	[No Response]	0
Guest 2 LGAT	[No Response]	0

2.4 Motion – Proposed offshore oil and gas development in Tasmania

Waratah-Wynyard / Hobart

That the Local Government Association of Tasmania advocate to Tasmanian State and Federal Government to not approve any new offshore oil and gas exploration and development in Tasmanian and Commonwealth waters.



Participant	Response	Weight
Break O'Day Council	Against	1
Brighton Council	For	2
Burnie City Council	Against	3
Central Coast Council	Against	3
Central Highlands Council	Against	1
Circular Head Council	Against	1
Clarence City Council	Against	4
Derwent Valley Council	For	2
Devonport City Council	Against	3
Dorset Council	Against	1
Flinders Council	Against	1
George Town Council	Against	1
Glamorgan/Spring Bay Council	Abstain	1

Glenorchy City Council	For	4
Hobart City Council	For	4
Huon Valley Council	For	2
Kentish Council	For	1
Kingborough Council	Against	4
King Island Council	[No Response]	1
Latrobe Council	Against	2
Launceston City Council	For	4
Meander Valley Council	Against	3
Northern Midlands Council	For	2
Sorell Council	For	2
Southern Midlands Council	Against	1
Tasman Council	For	1
Waratah - Wynyard Council	For	2
West Coast Council	For	1
West Tamar Council	Against	3
President LGAT	[No Response]	0
CEO LGAT	[No Response]	0
Policy Director LGAT	[No Response]	0
Guest 1 LGAT	[No Response]	0
Guest 2 LGAT	[No Response]	0



Participant	Response	Weight
Break O'Day Council	For	1
Brighton Council	For	2
Burnie City Council	For	3
Central Coast Council	For	3
Central Highlands Council	For	1
Circular Head Council	For	1
Clarence City Council	For	4
Derwent Valley Council	For	2
Devonport City Council	For	3
Dorset Council	For	1
Flinders Council	For	1
George Town Council	For	1
Glamorgan/Spring Bay Council	For	1

Glenorchy City Council	For	4
Hobart City Council	For	4
Huon Valley Council	For	2
Kentish Council	For	1
Kingborough Council	For	4
King Island Council	[No Response]	1
Latrobe Council	For	2
Launceston City Council	For	4
Meander Valley Council	For	3
Northern Midlands Council	For	2
Sorell Council	For	2
Southern Midlands Council	For	1
Tasman Council	For	1
Waratah - Wynyard Council	For	2
West Coast Council	For	1
West Tamar Council	For	3
President LGAT	[No Response]	0
CEO LGAT	[No Response]	0
Policy Director LGAT	[No Response]	0
Guest 1 LGAT	[No Response]	0
Guest 2 LGAT	[No Response]	0

3.1 Development Assessment Panels (DAPs)

Central Highlands / Devonport

Local government rejects the updated DAP Bill.



1. For 58
2. Against 2
3. Abstain 0

Participant	Response	Weight
Break O'Day Council	Against	1
Brighton Council	For	2
Burnie City Council	For	3
Central Coast Council	For	3
Central Highlands Council	For	1
Circular Head Council	For	1
Clarence City Council	For	4
Derwent Valley Council	For	2
Devonport City Council	For	3
Dorset Council	For	1
Flinders Council	Against	1
George Town Council	For	1
Glamorgan/Spring Bay Council	For	1
Glenorchy City Council	For	4

Hobart City Council	For	4
Huon Valley Council	For	2
Kentish Council	For	1
Kingborough Council	For	4
King Island Council	[No Response]	1
Latrobe Council	For	2
Launceston City Council	For	4
Meander Valley Council	For	3
Northern Midlands Council	For	2
Sorell Council	For	2
Southern Midlands Council	For	1
Tasman Council	For	1
Waratah - Wynyard Council	For	2
West Coast Council	For	1
West Tamar Council	For	3
President LGAT	[No Response]	0
CEO LGAT	[No Response]	0
Policy Director LGAT	[No Response]	0
Guest 1 LGAT	[No Response]	0
Guest 2 LGAT	[No Response]	0

3.2 Development Assessment Panels (DAPs) fallback position



Participant	Response	Weight
Break O'Day Council	For	1
Brighton Council	For	2
Burnie City Council	For	3
Central Coast Council	For	3
Central Highlands Council	For	1
Circular Head Council	For	1
Clarence City Council	For	4
Derwent Valley Council	For	2
Devonport City Council	For	3
Dorset Council	For	1
Flinders Council	For	1
George Town Council	For	1
Glamorgan/Spring Bay Council	For	1
Glenorchy City Council	For	4

Hobart City Council	For	4
Huon Valley Council	For	2
Kentish Council	For	1
Kingborough Council	For	4
King Island Council	[No Response]	1
Latrobe Council	For	2
Launceston City Council	Against	4
Meander Valley Council	For	3
Northern Midlands Council	For	2
Sorell Council	For	2
Southern Midlands Council	Against	1
Tasman Council	For	1
Waratah - Wynyard Council	For	2
West Coast Council	For	1
West Tamar Council	For	3
President LGAT	[No Response]	0
CEO LGAT	[No Response]	0
Policy Director LGAT	[No Response]	0
Guest 1 LGAT	[No Response]	0
Guest 2 LGAT	[No Response]	0

3.1 Development Assessment Panels (DAPs)

Ltrobe / Clarence

That the sector will have no fallback position.



Participant	Response	Weight
Break O'Day Council	Against	1
Brighton Council	Against	2
Burnie City Council	For	3
Central Coast Council	Against	3
Central Highlands Council	For	1
Circular Head Council	For	1
Clarence City Council	Against	4
Derwent Valley Council	For	2
Devonport City Council	Against	3
Dorset Council	For	1
Flinders Council	Against	1
George Town Council	Against	1
Glamorgan/Spring Bay Council	Against	1

Glenorchy City Council	Against	4
Hobart City Council	Against	4
Huon Valley Council	Against	2
Kentish Council	Against	1
Kingborough Council	Against	4
King Island Council	[No Response]	1
Latrobe Council	For	2
Launceston City Council	For	4
Meander Valley Council	Against	3
Northern Midlands Council	For	2
Sorell Council	Against	2
Southern Midlands Council	For	1
Tasman Council	For	1
Waratah - Wynyard Council	For	2
West Coast Council	For	1
West Tamar Council	Against	3
President LGAT	[No Response]	0
CEO LGAT	[No Response]	0
Policy Director LGAT	[No Response]	0
Guest 1 LGAT	[No Response]	0
Guest 2 LGAT	[No Response]	0

3.1 Development Assessment Panels (DAPs)

Devonport / Central Highlands

Limit call in criteria to (a) Council as applicant



Participant	Response	Weight
Break O'Day Council	For	1
Brighton Council	For	2
Burnie City Council	For	3
Central Coast Council	For	3
Central Highlands Council	For	1
Circular Head Council	For	1
Clarence City Council	Against	4
Derwent Valley Council	For	2
Devonport City Council	For	3
Dorset Council	Abstain	1
Flinders Council	For	1
George Town Council	For	1
Glamorgan/Spring Bay Council	Against	1
Glenorchy City Council	For	4

Hobart City Council	Against	4
Huon Valley Council	For	2
Kentish Council	Against	1
Kingborough Council	For	4
King Island Council	[No Response]	1
Latrobe Council	For	2
Launceston City Council	For	4
Meander Valley Council	For	3
Northern Midlands Council	For	2
Sorell Council	For	2
Southern Midlands Council	For	1
Tasman Council	For	1
Waratah - Wynyard Council	For	2
West Coast Council	For	1
West Tamar Council	For	3
President LGAT	[No Response]	0
CEO LGAT	[No Response]	0
Policy Director LGAT	[No Response]	0
Guest 1 LGAT	[No Response]	0
Guest 2 LGAT	[No Response]	0

3.2 Development Assessment Panels (DAPs)

Clarence / George Town

Limit call in criteria to (b) Council as applicant and Homes Tas.

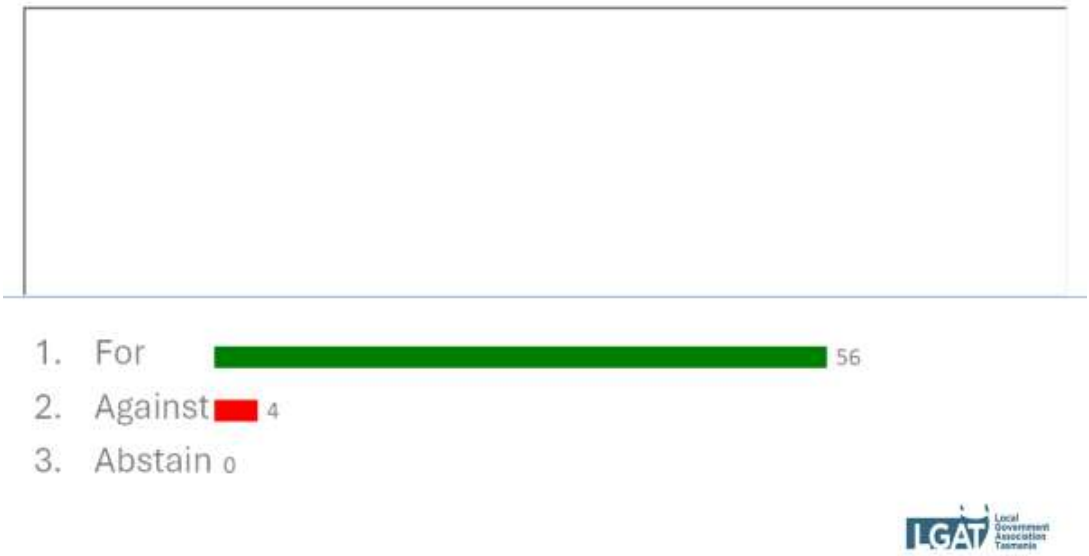

Participant	Response	Weight
Break O'Day Council	For	1
Brighton Council	For	2
Burnie City Council	For	3
Central Coast Council	For	3
Central Highlands Council	Against	1
Circular Head Council	For	1
Clarence City Council	For	4
Derwent Valley Council	For	2
Devonport City Council	For	3
Dorset Council	For	1
Flinders Council	For	1
George Town Council	For	1
Glamorgan/Spring Bay Council	Against	1

Glenorchy City Council	For	4
Hobart City Council	For	4
Huon Valley Council	For	2
Kentish Council	For	1
Kingborough Council	For	4
King Island Council	[No Response]	1
Latrobe Council	For	2
Launceston City Council	For	4
Meander Valley Council	For	3
Northern Midlands Council	For	2
Sorell Council	For	2
Southern Midlands Council	Against	1
Tasman Council	Against	1
Waratah - Wynyard Council	For	2
West Coast Council	For	1
West Tamar Council	For	3
President LGAT	[No Response]	0
CEO LGAT	[No Response]	0
Policy Director LGAT	[No Response]	0
Guest 1 LGAT	[No Response]	0
Guest 2 LGAT	[No Response]	0

4. Items for noting

Central Coast / Waratah-Wynyard

That Items 4.1.1 – 4.3.6 be endorsed.

Advocate

4.1.1 Local Government
4.1.2 Federal Election
4.1.3 Planning
4.1.4 Emergency management and recovery update

Member Services

4.2.1 Procurement update
4.2.2 Events and Professional Development overview

Sector Support

4.3.1 Workplace Health and Safety Review
4.3.2 Lift the Tone
4.3.3 Safeguarding Children update
4.3.4 Climate change update
4.3.5 Policy update
4.3.6 Sector support update



Participant	Response	Weight
Break O'Day Council	For	1
Brighton Council	For	2
Burnie City Council	For	3
Central Coast Council	For	3
Central Highlands Council	For	1
Circular Head Council	For	1
Clarence City Council	For	4
Derwent Valley Council	For	2
Devonport City Council	For	3
Dorset Council	For	1
Flinders Council	For	1
George Town Council	For	1
Glamorgan/Spring Bay Council	For	1
Glenorchy City Council	For	4

Hobart City Council	For	4
Huon Valley Council	For	2
Kentish Council	For	1
Kingborough Council	For	4
King Island Council	[No Response]	1
Latrobe Council	For	2
Launceston City Council	For	4
Meander Valley Council	For	3
Northern Midlands Council	For	2
Sorell Council	For	2
Southern Midlands Council	For	1
Tasman Council	For	1
Waratah - Wynyard Council	For	2
West Coast Council	For	1
West Tamar Council	For	3
President LGAT	[No Response]	0
CEO LGAT	[No Response]	0
Policy Director LGAT	[No Response]	0
Guest 1 LGAT	[No Response]	0
Guest 2 LGAT	[No Response]	0

Attachment to Item 1.2

Business Arising
General Meeting 2 April 2025

2	**Items for Decision**	
2.1	Motion – Adoption of 7 star energy efficiency requirements	Item was lost
2.2	Motion - Funding for line marking on local government roads	Refer to item 1.4 - follow up of motions
2.3	Motion - Public open space contributions	Refer to item 1.4 - follow up of motions
2.4	Motion - Proposed offshore oil and gas development in Tasmania	Item was lost
3	**Items for discussion**	
3.1	Development Assessment Panels (DAPs)	Refer to item 4.1.3
3.2	Development Assessment Panels (DAPs) fallback position	Refer to item 4.1.3
4	**Items for noting**	
4.1.1	Local Government Reform	Refer to item 4.1.1
4.1.2	Federal Election	Refer to item 1.5
4.1.3	Planning	Refer to item 4.1.3
4.1.4	Emergency management and recovery update	Refer to item 4.1.6
4.2.1	Procurement update	Refer to item 4.2.1
4.2.2	Events and professsional development overview	Refer to item 4.2.2
4.3.1	Workplace Health and Safety Review	Ongoing
4.3.2	Lift the Tone	Refer to item 4.1.5
4.3.3	Safeguarding Children update	Refer to item 4.3.1
4.3.4	Climate change update	Refer to item 4.3.2
4.3.5	Policy update	Refer to item 4.3.4
4.3.6	Sector support update	Refer to item 4.3.5
5	**Other Business**	
	Nil	

Attachment to Item 1.4

Follow-up of motions
General Meeting 2 April 2025

This report details motions where LGAT is actively pursuing an outcome.

Motion	Topic	Sub-topic	Meeting date	Member Update
That the Local Government Association of Tasmania lobby the Tasmanian Government to urgently increase the allocation of state-based funds for line marking on local government roads to more closely align with the quantum required to meet safe operating standards.	Infrastructure	Funding for line marking on local government roads	2/04/2025	LGAT's advocacy was successful in securing a proposal by the Department of State Growth for increasing the State Government funding of line marking, from the Road Safety Levy. The finalisation of this was contingent on the passing of the State Budget, which has now been delayed as a result of the State election.
That the Local Government Association of Tasmania lobby the Minister for Housing, Planning and Consumer Affairs and the State Planning Office to work with Councils to introduce an Open Space Policy that includes contribution requirements for all forms of subdivision including strata developments.	Infrastructure	Public open space contributions	2/04/2025	Pending the State election. Initial discussions have occurred with the State Planning Office. The State Government had announced a review of the Local Government and Building Miscellaneous Act.
That LGAT pursue with the Tasmanian Government the following: • Funds received by the State Government from Government Business Enterprise as Rate Equivalent payments be in the most part distributed to Local Government.	Finance	Government Business Rate Equivalent payments	21/11/2024	The exemption from rates for Hydro tasmania (& its subsidiaries) is as result of the 2003 Statewide Partnershipp Agreementon financial reform. See further information in the item in this agenda.
That LGAT Actively engages with the Office of Local Government to seek a reduction in the current six-month timeframe prescribed in the Councillor Code of Conduct for complaints to be lodged.	Governance	Code of Conduct – Timeframe for making a complaint	21/11/2024	LGAT has written to the Director of Local Government seeking feedback on this resolution.
That engagement occurs with the State Government is essential to develop a set of Model By-Laws. These By-Laws would allow councils to customize their regulations after development, minimizing the current bureaucratic obstacles. Currently, significant barriers in creating and implementing parking and regulatory By-Laws prevent small councils from developing their own regulations.		By-laws	21/11/2024	Currently paused, as the State Government has been updating the General and Meeting Regulations, alongside the targeted review of the Local Government Act 1993.
That LGAT establishes a review to determine whether or not to develop a sector wide position on cat management and that the determination of any such position be presented to the State Government addressing issues including, but not limited to: 1. The recognition that cat management is a shared responsibility across all levels of government, business and the community; 2. Avenues to increase community awareness, participation and commitment by pet cat owners to manage cats responsibly; 3. Assessment of best practice techniques in relation to the planning, management and control of stray and feral cats; 4. Improved knowledge about feral, stray and domestic cats to better inform management; 5. inimising the impacts of cats in areas with important conservation values and agricultural assets; 6. Undertake legislative change and the provision of resources to create an effective framework for managing cats, including resourcing for cat management facilities; 7. Review the roles and responsibilities of local and state governments in relation to cat management and resource allocation". 8. That the state government recognise their role in providing funding for local government.	Animals and wildlife	Review of Cat Management Legislation	21/11/2024	Underway. The State Government review of the Cat Management Plan has commenced with a broad survey, but is progressing slowly. Advice is pending on engagement with local government.

Motion	Topic	Sub-topic	Meeting date	Member Update
That the Local Government Association of Tasmania (LGAT) request the State Government to urgently amend the Crown Lands Act 1976 to establish automatic statutory rights of access over Crown Reserved Road for all landowners to access their adjoining properties that have Reserved Roads accessing their properties as proposed in the 'Crown Lands – Reserved Road, Position Paper, July 2009' to provide certainty of access to landowners generally and for the purposes of meeting access requirements under the Tasmanian Planning Scheme.	Planning	Creation of Statutory Rights of Carriageway over Crown Road Reserves	21/11/2024	We met with the Deputy Secretary Parks and Wildlife Service in June 2025 to discuss the issues. We will work with Parks and Wildlife to engage councils on examples to help identify if automatic, or streamlined rights are feasible.
That LGAT: 1. Lobby the State Government as a priority, to introduce legislation that mandates the need to have workers' compensation insurance (or equivalent) made available to councillors, to support recent legislative changes regarding psychosocial safety; and 2. The State Government work with the insurance industry to introduce the insurance framework as a priority.	Governance	Psychosocial Safety Insurance for Elected Members	4/09/2024	This resolution was included in LGATs submission to the Targeted Amendments to the Local Government Act. The State election has delayed engagement on the Act.
That LGAT request the State Government legislate, that eligibility for nomination as Councillor requires a person to hold a Working with Vulnerable People Card.	Governance	Working with Vulnerable People Card – Eligibility criteria for Councillor Nominees	4/09/2024	The Minister for Justice responded to our letter advising that the State Government does not view it as appropriate that councillors, as a standard requirement for councillors. We wrote to all councils providing the advice and highlighting the range of ways that they can support child safety in their council and community. This resolution will be closed following the July '25 General Meeting.
That LGAT engages in dialogue with the State Planning Office to seek legislative amendment to permit individual councils to define 'substantial commencement of work' in the context of local Planning Permit Approvals.	Planning	Substantial Commencement of Work	4/09/2024	We have discussed this with the SPO and also written seeking a response.
That the Local Government Association of Tasmania lobby the Tasmanian State Government for legislative and operational reform to enable state and local government to manage and control the environmental and economic risks posed by wild, feral and nuisance animals, such as pigs, goats and deer more effectively.	Environment	Legislative Reform to Effectively Manage the Environmental and Economic Risks Posed by Wild and Nuisance Pigs	4/09/2024	We are engaging the relevant Manager in Biosecurity Tasmania to develop a way forward.
That LGAT calls upon the State Government to amend its Pensioner Rates Remission Guidelines to benefit pensioners who receive an eligible card within a financial year, post the 1st July with the benefit being prorated from the date of issue.	Rates	Proposed amendment to the pensioner remission gudelines	26/07/2024	The Secretary of the Department of Treasury and Finance has indicated that "the Government has previously considered this and determined it unfeasible due to the impact on legislation and systems, the increase in administrative complexity and costs for councils and Government. Further, in order to ensure consistent treatment for taxpayers, implementing a pro rata approach would require that consideration be given to removing recipients from the scheme who become ineligible partway through the year, with councils potentially required to recoup funds from recipients who become ineligible partway through the year." Further engagement is underway with Treasury.
That LGAT seek: 1. support from Tasmanian Councils for the renegotiation of the Partnership Agreement on Communication and Consultation 2003 (Partnership Agreement), between the Tasmanian Government and Councils 2. agreement in principle from the Tasmanian Government to renew the Partnership Agreement, subject to the negotiation of new terms; and 3. that, in pursuit of a new Partnership Agreement, LGAT establish a working group comprising council representatives to develop the key terms of a new Partnership Agreement."	Governance	State and Local Government Consultation Protocols	14/03/2024	Work had commenced on a draft Partnership Agreement, that was to be presented at the May PLGC Meeting. With the calling of the State election, PLGC has been postponed.

Motion	Topic	Sub-topic	Meeting date	Member Update
That LGAT lobby the State Government: 1. To amend legislation to include electricity generation and storage plant and equipment in capital valuation (as occurs in Victoria) and to allow energy sector developments to make appropriate payments in lieu of rates under a regulated formula subject to indexation consisting of a fixed payment per site and a variable payment based on installed capacity. 2. That applicable developments subject to the rating policy amendments will include all current electricity generation and storage developments under existing technologies, as well as future generation and storage developments under existing and new technologies. 3. Where a Council's infrastructure and service provision is impacted by energy sector developments, consider the means for appropriate compensation via similar payment arrangements to ensure ratepayers are not financially impacted.	Finance	Rate equivalent payments	14/03/2024	LGAT has developed a position paper on municipal rating and has been advocating to Renewables Climate Change and Future Industries Tasmania. Details in the Renewable energy rating paper in this agenda.
That LGAT undertake advocacy on behalf of Councils to have road line marking responsibilities legislated and additional funding provided by the State Government.	Governance	Road Line Marking Responsibilities	1/11/2023	This resolution has been updated with the more recent (April 2025) line marking resolution. As such it will be closed folowing the July 2025 General Meeting.
That LGAT be requested to convene a reference group from member Councils to develop options and recommendations for the sector to: 1 Assess the impact of the 42-day rule on planning outcomes across local Councils in Tasmania (including both qualitative and quantitative data). 2 Identify what practices and delegations councils currently utilise to manage the 42-day rule, including the impact of those practices and delegations on representor objections. 3 Review equivalent 'deemed approval' and timeframe extension mechanisms of other jurisdictions to compare with Tasmania's arrangements. 4 Based on the findings of points 1, 2 and 3 above, identify whether the 42-day rule operates in a manner that is fair and equitable to all parties to a development application; that is both applicants and representors. 5 Recommend changes be implemented to ensure development applications are not required to be resolved under delegation because an applicant refuses to grant an extension of time for an application to be considered at a Council meeting.	Planning	Review of 42 Day Development Application Timeframe	1/11/2023	A detailed paper and recommendations will be finalised following the State election.
That LGAT lobby the State Government urging legislative change to outlaw the creation of covenants which place restrictions on the use of land and property for: a. public, social or affordable housing; or b. tenants or occupants based on their source of income, or social or financial circumstances.	Planning	Motion - Restrictive Covenants on use of land and property	30/06/2023	The Land Titles Office is developing a package of options to address restrictive covenants that are impacting on social and affordable housing. This paper is expected to be released in "early 2025".
That LGAT seek revisions to the Property Agents and Land Transactions Act 2016 to consider: a) Requiring a 337 Certificate prior to listing of a property and making it available as part of the sale process; and b) Requiring full disclosure for properties as part of the listing process."	Governance	Review of Property Agents and Land Transactions Act 2016	8/12/2022	Following the advice from the Tasmanian Government that CBOS had been directed to cease all work on this issue we wrote to the Minister for Housing, Planning and Consumer Affairs Felix Ellis. We are yet to receive a response.
That LGAT lobby the State Government to investigate a legislative mechanism to provide local government authorities with enhanced power to appropriately act on dilapidated, derelict and abandoned buildings registers and to charge levies in respect to those properties.	Building	Abondoned buildings	18/03/2022	Progression of draft guidance has been delayed due to other priorities.
That LGAT coordinate arrangements for a more collaborative arrangement between Local Government and State Government and all compliance agencies with responsibilities that include dog control and wildlife management and protection.	Animals and wildlife	Dog Control and Wildlife Management	3/12/2020	PWS have advised that the final policy is still under development and is subject to caretaker provisions under the State election.

Attachment to item 1.7

LGAT Annual Plan 2025 Progress Report

June 2025

Advocate

Area	Focus	KPI – process and outcome	Progress	Update
Local government reform and sector sustainability	Support councils through the implementation of the Future of Local Government Review reforms.	**Process** The State Government works collaboratively with the local government sector on the changes. **Outcome** The reforms create a more robust and capable system of local government to support and service communities.		**Process** The Office of Local Government has been engaging very closely with LGAT and with sector on priority reforms. **Outcome** The priority reforms will contribute to this outcome.
Land use planning	Support councils to engage with the reforms of the Tasmanian planning system, with a particular focus on informing the Development Assessment Panels proposal and completion of the missing strategic planning components of our system	**Process** Engagement with local government by the State Government recognises the unique role that councils play in the planning system.		**Process** We continue to work with the State Planning Office to encourage their engagement with local government. It is a positive shift that the State Government has committed to resourcing the coordination of the Regional Land Use Strategies, however it is disappointing it is still to be actioned. The continued pursuit of the Development Assessment Panels by the State Government (pending the State election) undermines other areas of progress.

Area	Focus	KPI – process and outcome	Progress	Update
		Outcome Reforms support the role of local government in our planning system and recognise the different goals of councils in supporting their communities.		**Outcome** The State Government's response to DAPs and our related advocacy is important for this outcome.
Housing	Ensure councils are properly supported in their role to improve housing security and that the State Government implements the Tasmanian Housing Strategy with councils as partners.	**Process** State Government treats local government as a partner in delivery. **Outcome** Actions relevant to local government under the Strategy are delivered to address housing security.		**Process** There has been good engagement with Home Tasmania and individual councils when there have been challenges, such as in Penguin for Central Coast Council. The LGAT President and CEO are members of the Minister's Building and Construction Roundtable that is intended to support the delivery of housing. **Outcome** The actions are underway.
Infrastructure	Continue our advocacy to support local government to provide quality services to the community. In particular: • The review of road management legislation • Fairer road funding • An infrastructure contribution framework.	**Process** The State Government engagement recognises the unique role that councils play. **Outcome** Fairer and more consistent approaches for funding and delivering local infrastructure.		**Process** The review of road legislation is paused. There is a commitment to establish an infrastructure contribution framework, however the work is yet to commence. Advocacy is underway on this front. **Outcome** Pending. With advocacy currently focussed on funding for line marking, the heavy Vehicle Motor Tax and infrastructure contributions.

Area	Focus	KPI – process and outcome	Progress	Update
Emergency management	State and Federal Government acknowledgement and support for the role of local government in emergency management.	**Process** Strong collaboration and engagement with local government and the associated reform. **Outcome** Increased State Government support to strengthen local government's capability and capacity in emergency management and resilience.		**Process** Broadly, we have good relationships with State Government across the range of functions and projects and we continue to push for better collaboration **Outcome** The extension of the audit of councils' emergency management capability and capacity is underway, funded by the State Government. The audits will support any bids for greater partnerships or direct investment.

Member Services

Area	Focus	KPI – process and outcome	Progress	Update
LGAT procurement	Continue to implement the business plan supporting increased services and advice to councils with a focus on civil works procurement and procurement training.	**Process** Strong collaboration with our members to ensure LGAT Procurement activities meet council needs. **Outcomes** Successful introduction of the LGAT civil works panels. Councils continue to engage LGAT Procurement to deliver procurement training.		**Process** LGAT Procurement continues to engage with councils to support councils' procurement needs. A civil works working group of council officers is being used as the evaluation panel for the refresh of the civil panel. We continue to engage with the sector to inform our initiatives. **Outcomes** LGAT Civil Works panels have been in place for nine months. Several councils have been using the panels

Area	Focus	KPI – process and outcome	Progress	Update
		Continue to support councils in the use of LGAT Procurements products and services.		consistency. Feedback from councils using the panel has been positive. A program of training specific to civil works procurement is currently under development. A free procurement 101 webinar for elected members was held on 28 May. Refer to the Procurement paper in this agenda for more information.
Networks, learning and development	Provide a range of events that support councils' connection and governance.	**Process** Delivery of the scheduled events. **Outcomes** Elected members and council officers attend and are satisfied with LGAT's events. Elected members have enhanced capability and capacity to fulfil their roles		**Process** The 2025 LGAT events program has been delivered. Refer to the events paper in this agenda for more information. **Outcomes** Pending feedback on 2025 events.

Sector Support

Area	Focus	KPI – process and outcome	Progress	Update
Elected member health and safety	Work with the State Government and councils to implement a framework to support a safe workplace for all councillors.	**Process** Engagement is focused on addressing the needs of councils in the development of appropriate and useful frameworks and tools. **Outcomes** Implementation of the recommendations of the Workplace Health and Safety Review of Elected Members and other emerging priority reforms.		**Process** Progressing well, with the recently released *Targeted amendments to the Local Government Act 1993 Discussion Paper* and *Model Guidelines for Unreasonable Conduct within Councils (Elected Members)* both being informed by LGAT's advocacy and council engagement. **Outcome** Complete – the recommendations of the Workplace Health and Safety Review of Elected Members have been completed and the implementation plan closed. Work will continue on the priority legislative reforms that have emerged from this work.
Tasmanian Development Manual	Delivering the Tasmanian Development Manual to provide certainty and clarity for councils and proponents.	**Process** Councils and stakeholders are engaged in its development. **Outcomes** The Manual is delivered on time and meets the needs of its users.		**Process** Councils have provided feedback on the draft manual, along with key State Government agencies. **Outcome** There has been positive feedback to date from councils and key State agencies and the project is running to schedule.

Attachment to item 2.2



Rating of new energy developments

Position Paper

June 2025

Contact: Ben Morris, Policy Director

Email: ben.morris@lgat.tas.gov.au

Phone: 03 61463740

www.lgat.tas.gov.au

Overview

This paper provides an overview of the available approaches to rating 'new' energy developments in Tasmania and suggests a way forward for Tasmanian councils. New energy developments include solar, wind, battery or other energy infrastructure not currently excluded from rating under Section 87 of the *Local Government Act 1993*.

The history associated with Hydro Tasmania's rates exemption is provided separately.

Summary

- Renewable energy generators are not paying equitable rates compared with other commercial operations.
- Approaches in Queensland and Victoria provide working solutions for appropriate contributions.
- The State Government has committed to investigating a solution, but progress is slow, and councils may choose to apply an interim approach.

Background

LGAT's members have made a number of relevant decisions. The most recent, in Table 1 below, calling for changes to the way that energy businesses contribute to the costs of local government, similar to other businesses and residents.

Table 1: Recent relevant sector resolutions.

Date	Resolution
November 2024	That LGAT pursue with the Tasmanian Government the following: • Funds received by the State Government from Government Business Enterprise as Rate Equivalent payments be in the most part distributed to Local Government.
March 2024	That LGAT lobby the State Government: 1. To amend legislation to include electricity generation and storage plant and equipment in capital valuation (as occurs in Victoria) and to allow energy sector developments to make appropriate payments in lieu of rates under a regulated formula subject to indexation consisting of a fixed payment per site and a variable payment based on installed capacity. 2. That applicable developments subject to the rating policy amendments will include all current electricity generation and storage developments under existing technologies, as well as future generation and storage developments under existing and new technologies. 3. Where a Council's infrastructure and service provision is impacted by energy sector developments, consider the means for appropriate compensation via similar payment arrangements to ensure ratepayers are not financially impacted.

The Future of Local Government Review (FoLGR) recommended (#17) that:

- The Tasmanian Government should further investigate and consider introducing an alternative framework for councils to raise revenue from major commercial operations in their local government areas, where rates based on the improved value of land are not an efficient, effective, or equitable form of taxation.

The FoLGR final report called for a "revenue sharing model" rather than a rating approach based on efficiency, and a perceived risk that rating may form a barrier to investment. The report provided a case study of the Victorian Payment in Lieu of Rates (PiLoR) approach[1] where generators pay a rate based on their electricity generation.

In its response to the FoLGR final recommendations, the State Government 'partially supported' this recommendation noting that:

- The Government will consult on potential frameworks to help benefit councils that assist major operations in their local government areas.

We understand that this recommendation was 'partially supported' due to the wariness around potential impacts on future and current energy developments. The State Government's response indicated that work would commence by the end of 2024. We have made enquiries to both the Office of Local Government (OLG) and Renewables Climate and Future Industries Tasmania (ReCFIT) to understand the progress on this action. Apparently neither agency is responsible for the action and OLG was making further enquiries to find the State Government owner of the action.

Separately, and in response to LGAT advocacy, the Office of the Valuer General has created new Valuation Property Classification Codes for Electricity Generation, Electricity Storage and Electricity Transmission that will allow for the specific valuation and then, potentially, rating of these properties. The Valuer General wrote to relevant councils in January 2025 providing this advice (see attached Fact Sheet), provided a list of potentially relevant properties in the municipality and asking for their confirmation. Following this confirmation, individual councils now need to request a supplementary valuation for the new code to be applied.

Interstate approaches

The Victorian PiLoR framework is established under their *Electricity Industry Act 2000* to provide a base contribution that energy generators must pay to councils. There are two streams:

- Over 25 megawatts (MW) nameplate generation – an indexed charge made up of a fixed ($65,729) and variable component ($1,480 / MW)
- Under 25 MW nameplate generation – for smaller or community-based generators with only a variable component with a minimum annual payment, $7,500 (commercial) and $5,000 (community).

[1] Available at: https://www.energy.vic.gov.au/renewable-energy/payment-in-lieu-of-rates-for-electricity-generators

Alternatively, the electricity generator may pay general rates determined by applying the applicable differential rate in the dollar to the capital valuation of each property, inclusive of electricity generation plant and equipment, and levied under Part 8 of the *Local Government Act 1989* (Vic).

In Queensland many councils rate renewable energy facilities, with Goondiwindi Regional Council's 2024/25 rates provided as an example below in Table 2. Each council determines its own rate, which vary considerably across the state. For example, for a 25 MW facility in 2023/24, the minimum rate liability ranged from $6,750 to $51,502, with the median $23,883.

Table 2: Goondiwindi Regional Council - 2024/25 rating

Renewable Energy facility productive capacity	Minimum general rate	Cents in $ of Valuation
<20MW	$ 8,410.00	$0.07357
20MW - <50MW	$ 29,430.00	$0.07330
50MW - <100MW	$ 63,070.00	$0.07304
100MW - <200MW	$ 126,150.00	$0.07277
200MW - <300MW	$ 210,250.00	$0.07251
300MW - <500MW	$ 336,390.00	$0.07224
500MW - <750MW	$ 525,610.00	$0.07198
750MW - <1000MW	$ 735,860.00	$0.07171

The Local Government Association of South Australia (LGASA) commissioned AEC Group to undertake a detailed review of the South Australian situation, with the report *Equitable rating of the energy sector – South Australia*[2] released in February 2025. The report examined the Victorian and Queensland rating approaches and finds that:

- The rating/PiLoR approaches in Victoria and Queensland have not impacted on the rate or size of the renewable energy investment, indeed the two states have the strongest forward investment of any other.
- The revenue in South Australia under the two approaches is $27.9 million/annum using a municipal rating approach and $6.3 million/annum using the PiLoR methodology.
- Changes would provide a cost-of-living improvement in South Australia, with the annual rating burden reduced per household by between $29 (PiLoR) and $127 (municipal rating).

To address competition concerns the report recommended that the Victorian approach and rating levels be adopted in South Australia to allow generators to make payment in lieu of rates.

[2] Available at: https://www.lga.sa.gov.au/__data/assets/pdf_file/0029/1753337/Equitable_Rating_of_the_Energy_Sector_Report.pdf

On 19 March, LGASA was successful in getting a private member's bill, the Statutes Amendment (Rates—Electricity Generation) Bill 2025 introduced into the South Australian Legislative Council. The Bill details a PiLoR approach with a fixed and variable charge, at rates be determined by the relevant Minister. LGASA is not pursing a municipal rating approach, as the required legislative change is not supported by their Valuer General.

Recommendations

The ideal approach for Tasmania would be to align with the Victorian approach with the municipal rating and PiLoR options, as per the LGAT March 2024 resolution. At this time, there is limited progress from the State Government on a Tasmanian PiLoR, however the local government sector can still progress the municipal rating methodology in the meantime.

To avoid any significant adverse response from renewable energy providers or the State Government, it is suggested councils apply a consistent rate in the dollar across the state at a level similar in scale to the Victorian PiLoR rates. However, councils could still determine to apply their own rate.

Broadly, the steps we recommend are required to apply the Victorian rating methodology in Tasmania are:

- Valuer-General coding of the relevant properties.
- Council confirmation of relevant properties.
- Undertake supplementary valuation of relevant properties.
- LGAT to undertake work to calculate PiLoR-similar rating, converting MW to $ valuation.
- Council to decide, by absolute majority, to differentially rate properties classified under the new codes in line with the *Local Government Act 1993* (s.107).
- Council to review and update where appropriate its rates and charges policy in line with the LG Act (s.86B).
- Application of new rating approach.

Next steps

We seek support for LGAT undertaking the work to calculate a PiLoR-similar rating in the dollar.

The work to calculate the PiLoR-similar rating will involve:

- Calculating a PiLoR rate (fixed and variable) for each site.
- Dividing the PiLoR figure by the supplementary valuation $.
- Finding the median value across the site to provide rate in the dollar equivalent to PiLoR.

LGAT will also continue its advocacy for a legislatedTasmanian PiLoR in line with the March 2024 resolution.

Attachment to item 4.1.2

Local Government Association Tasmania







STATE ELECTION PRIORITY STATEMENT 2025

lgat.tas.gov.au

Our Key Election Priorities



Planning Priorities to Put Housing First

- Fix the foundations to support the system.
- Infrastructure contributions and applicant support.



Safer Local Roads

- Fair distribution of the Heavy Vehicle Motor Tax.
- Reinvest speeding fine revenue directly into local road safety for drivers and vulnerable road users.



Local Government Reform

- Implement the Future of Local Government Review reform agenda.
- Ensure rate concessions are targeted at those in genuine need.

Tasmania is increasingly recognised as a valuable place for people to visit and live. However, challenges remain. Addressing those requires collaboration among governments, organisations, industries, and communities.

Local government is the closest sphere of government to the community and therefore has enormous potential to help make a positive difference. Our councils deliver the services and infrastructure that shape the daily experiences of every Tasmanian.

Investments into communities through councils are an investment in the wellbeing of every Tasmanian. We are not a secondary stakeholder.

A range of priorities exist that are specific to local communities. However, some priorities cross all local government areas. This Statement presents the current high-level priorities for our sector in Tasmania.

Local government encourages all political parties and independents to commit to working in true partnership with our sector over the coming years.

Planning Priorities to Put Housing First

Tasmania's planning system is incomplete. The statewide planning policies are missing, the regional land use strategies are outdated, and there is very little supporting information to assist proponents through the regulatory system. This creates issues throughout the entire system as developers don't have a full and coherent picture of the development outcomes that local communities aspire to.

We need a cohesive system for identifying growth infrastructure needs and eliminating the first-mover disadvantage. This will make sure that we can deliver the right infrastructure in the right place at the right time.

Reform effort needs to be focused on the strategic elements of land use planning, not on tinkering with regulations or development assessment processes. This is demonstrated below.

Each layer of our framework supports the component above. Development assessment and decisions are the result of all the layers beneath them. But when you interrogate those layers, the foundations of our planning system are either outdated or missing entirely.

Significant, at-scale improvements in housing delivery will only be supported by well-coordinated strategic planning and the appropriate supporting measures.

Tasmania's Planning Framework

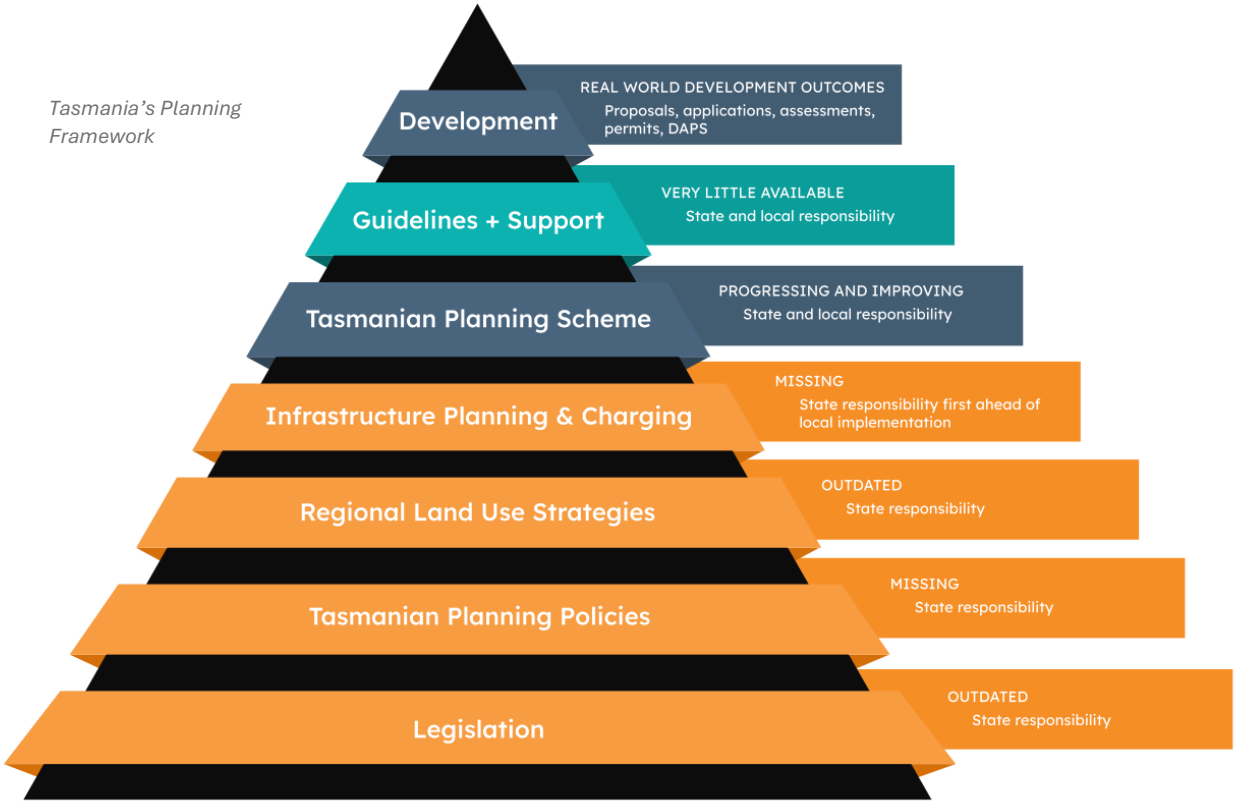

Fix the foundations to support the system

To fix the foundations of Tasmania's planning system, **we're calling for a commitment to:**

- **Complete the Tasmanian Planning Policies to provide state-level guidance to regional and local plan making.**
- **Invest in Tasmania's regional land use strategies. These are the keystones in our planning system, but they are now over 20 years old.**

Infrastructure contributions and applicant support

To support the delivery of key infrastructure that will deliver more housing, **we're calling for a commitment to:**

- **Establish an infrastructure contributions framework to equitably share the costs of delivery between development proponents so that the right infrastructure can be delivered at the right time.**
- **Prepare a more comprehensive suite of planning information, with useful development design guidelines, process flowcharts and applicant checklists.**

Safer Local Roads

The efficient functioning of Tasmania's economy and the safety of its road users rest on how well our state and local roads work together as a system. Local government manages almost 80 per cent of Tasmania's roads. We firmly believe that every person has the right to travel safely, and that no one should be seriously injured or killed during their everyday journeys on our roads. Unfortunately, 60 per cent of road fatalities in Tasmania occur in rural areas. In most cases, this is because of the historic challenges of construction in these environments, resulting in often narrow, hilly and twisty roads.

The current Commonwealth and Tasmanian Government funding streams for road safety, such as the Black Spot Program, Vulnerable Road User Program, and Safer Rural Roads Program, address issues on a per-site basis but do not support a long-term, strategic and network approach. Instead, evidence-based local road corridor safety plans with multi-year investments are needed.

Alongside road system improvements for vehicular safety, it is equally important that we invest in protecting our most vulnerable road users – pedestrians and cyclists. This investment not only improves road safety and reduces transport congestion but also has important physical and mental health benefits. The State Government's Better Active Transport Grant Program has been very successful in improving active transport opportunities in partnership with local government. It is critical that this program is reinstated and expanded.

There are two existing road-user funding sources that would be appropriate for these improvements: speeding fine revenue and the Heavy Vehicle Motor Tax.

Revenue from speeding fines is an ideal funding source to reinvest into road safety initiatives as it is directly linked to unsafe driving behaviour, which increases when people drive at dangerous speeds, and decreases as they do the right thing. It also means speeding offenders are paying for initiatives, rather than those who are driving safely.

The Heavy Vehicle Motor Tax is charged to heavy vehicle users to recover the higher road maintenance costs caused by these vehicles. Around $30 million is collected per year by the State Government. However, it only provides $1.5 million to local government, even though councils manage 14,400 km of Tasmania's road network.

Despite a steady rise in heavy vehicle usage and the revenue it generates for the State Government, funding to local councils has remained unchanged for 27 years. It has not increased by a single cent.

A fairer share for local roads

To support our communities having access to safe, reliable local roads and being provided with healthier, more sustainable travel options, **we're calling for a commitment to:**

- **A fair distribution of the Heavy Vehicle Motor Tax revenue, which means distributing that revenue among all road managers on the same basis it is charged – on-road use.**
- **Reinvest speeding fine revenue directly into local road safety by supporting road network safety plans and reinstating the Better Active Transport Grants Program.**

Local Government Reform

Tasmania's councils, like all levels of government, need to ensure they are ready and able to meet the future needs of our community. Tasmanians need a capable and effective local government sector to support their wellbeing. This will inevitably require changes in the coming years.

Throughout 2022 and 2023, the independent Local Government Board undertook a broad program of research, analysis, and engagement to understand what changes will underpin a more robust and capable system of local government for current and future Tasmanian communities. The Board also explored how those changes can be successfully delivered.

As a result of this work, the Future of Local Government Review outlined 37 recommendations for reforming the current system. These changes aim to equip councils to better address the challenges and opportunities our communities will face over the next 20 to 30 years. This represents an ambitious reform agenda that is largely supported by our sector, with implementation **underway** on the reform program.

Shape the future of local government

Local government has invested heavily in the Future of Local Government Review and initial work across the priority reform areas. **We are requesting that:**

- **This reform agenda continues following the state election, irrespective of who forms government.**

Ensure rate concessions are targeted at those in genuine need

The Local Government Act prevents Tasmanian councils from applying rates to Independent Living Units (ILUs) operated commercially by not-for-profit providers.

What this means is that a retired person living in their family home must pay rates, while a person of similar circumstances, who has sold their house to move into an ILU owned by a not-for-profit, does not pay rates.

The typical ILU resident is not a person or couple that requires charitable assistance. Residents usually have substantial assets and do not qualify for the full age pension.

People living in ILUs still enjoy all the same council services as ordinary ratepayers. This includes council roads, walking and cycling trails, parks and reserves, events and activities, and stormwater management. They just don't pay for them.

Instead, other ratepayers, including retired people living in their family home, subsidise the ILU residents, who receive a 100 per cent concession on their rates, irrespective of their financial situation.

To ensure rate concessions are targeted to those in genuine need, **we are requesting that:**

- **The Local Government Act is amended so that, like those living in their family home, a remission in rates only applies to residents in ILUs who require charitable assistance.**

Attachment to item 4.1.4

STATEWIDE PARTNERSHIP AGREEMENT BETWEEN GOVERNMENT OF TASMANIA AND TASMANIAN COUNCILS ON FINANCIAL REFORM

Tasmania

LGAT
local government association of tasmania

JULY 2003

State and Local Government are committed to the reform of financial arrangements between the two governments. Simplifying and making more transparent the financial relations between the two spheres of government will enhance government decision making and lead to efficiency gains and greater economic benefits for each tier of government and the Tasmanian community as a whole. These reforms are outlined in the F*inal Outcomes Paper*, a copy of which is attached.

To this end, at its meeting on 29 July 2003, the Premier's Local Government Council agreed to the following reforms:

- the full application of State Government taxes on Local Government and of council rates on State Government land with the exception that:
    - national parks, forest reserves, conservation areas, public parks and roads, bridges and associated infrastructure (including railway line corridors) be exempt from rates;
    - parks and gardens held by Local Government be exempt from land tax;
- the abolition of the Library and Local Government Planning levies; and
- the complete identification and classification of all Crown land;
- the valuation of all Crown land that is required to be rated; and
- Hydro Tasmania's Crown land occupations which are not currently rated to be exempt from rating but subject to a rates equivalent regime, the revenue from which will be retained by the State Government.

In agreeing to these reforms, State and Local Government are also committed to the principle of non-discrimination, that is, taxes will be applied between State and Local Government so that the taxing government:

- makes available to the taxpayer government exemptions and concessions available to other private taxpayers;
- administers the law on a consistent basis across all taxpayers;
- introduces changes to the tax base in a way that does not distinguish between private and public sector taxpayers, to the detriment of public sector taxpayers; and
- ensures changes to tax arrangements will not, in practice, have the effect of imposing an increase in the tax burden which is disproportionate to that of any other taxpayer.

In making these commitments the parties note the strong commitment of the State Government to its Fiscal Strategy, in particular the commitment not to introduce new taxes or increase the rate of existing taxes.

The State Government also undertakes to:

- identify, value and place on the Valuation Roll, unallocated parcels of Crown Land; and
- ensure that the rate base of councils, as at the date the reforms are implemented, is maintained when land which is currently in private ownership is acquired by Hydro Tasmania

SIGNED for and on behalf of **THE CROWN**

IN RIGHT OF THE STATE OF TASMANIA

By the Hon Jim Bacon, MHA
Premier

_____

SIGNED for and on behalf of **ALL TASMANIAN**

COUNCILS

By Lynn Mason
President, Local Government Association of Tasmania

_____

STATE AND LOCAL GOVERNMENT FINANCIAL REFORM

FINAL OUTCOMES

A REPORT BY THE STATE AND LOCAL GOVERNMENT FINANCIAL REFORM WORKING GROUP

JUNE 2003

VERSION 1

TABLE OF CONTENTS

INTRODUCTION 6
Background 6
Paper Purpose 7
RECOMMENDED REFORM MODEL 7
Recommendations – Issues Paper, Valuation and Rating of Crown Land Papers 7
Forestry and Hydro 8
THE ACHIEVEMENT OF REVENUE NEUTRALITY 9
IMPLEMENTATION 10
Legislative Amendment 10
Further Stakeholder Consultation 10
Timing 10
RECOMMENDATION 10
APPENDIX 1: MEMBERSHIP OF THE SLGFR WORKING GROUP 12
APPENDIX 2: ESTIMATED FINAL IMPACTS ON COUNCILS 13

INTRODUCTION

Background

A project to identify the key issues and financial implications of reforming State and Local Government financial relations, by simplifying and making more transparent the financial relations between the two levels of government, is now almost complete. These reforms will enhance government decision-making and lead to efficiency gains and greater economic benefits for each tier of government and the Tasmanian economy as a whole by ensuring that the true cost of providing government services can be taken into account.

A Working Group has undertaken the project and provided recommendations to the PLGC through the PLGC Officials Committee. The Working Group is comprised of representatives from the Department of Treasury and Finance, the Department of Premier and Cabinet, the Local Government Association of Tasmania (LGAT) and four councils. A list of Working Group members is provided in Appendix 1.

Throughout the reform project, the PLGC has endorsed a number of discussion papers that have formed the basis of ongoing consultation with local councils. To date the PLGC has approved a *Project Plan; Principles for Reform of State and Local Government Financial Relationships;* a *Communications and Consultation Strategy;* an *Analysis of State and Local Government Financial Flows;* an *Issues Paper;* a *Valuation of Crown Land Paper* and a *Rating of Crown Land Paper*.

The Working Group has also prepared a *Revenue Neutrality Paper* and *Supplementary Revenue Neutrality Paper* examining the revenue distribution impacts of the proposed reforms at a sector level and upon individual councils. These two papers, together with this *Final Outcomes Paper*, form the basis for recommendations to the PLGC on how to proceed with the reform and implement the required changes.

Project Objectives

The focus of the SLGFR project has been on those financial arrangements that involve exemptions, subsidies or concessions that distort government decision-making.

Principles have been agreed to guide the overall development of a reform model, aimed at maximising the benefits achievable. Three principles have effectively governed the conduct of the SLGFR project. These include:

- *financial transparency* – the reforms should aim to improve the transparency of financial arrangements between each level of government. This relates particularly to the various exemptions and subsidies existing between State and Local Government, and the implications of these for efficient resource use and accountability;

- *revenue neutrality* – the financial impact of the reform proposals will be revenue neutral between the two levels of government. Further, all reasonable effort must be made to minimise adverse financial consequences for individual councils. The extent of revenue neutrality is to be determined in respect of the 1999-00 financial year (the base year); and

- *non-discrimination* – while individual entities will be affected differently by reforms, this should only occur as a result of the consistent application of common principles, and not from a different treatment of similar bodies.

The SLGFR project adopted financial arrangements for the 1999-00 financial year as the base, representing an agreed point from which revenue neutrality has been assessed between the two levels of government and among individual councils.

The overriding objective of the project has been to simplify and make more transparent the financial arrangements between the two levels of government. The reforms will result in a greater alignment between the revenue and expenditure responsibilities of the two levels of government and will ensure that both governments face charges that are fully reflective of costs. This will enhance the efficiency of resource management by ensuring that the full cost of providing services or holding land can be taken into account.

These reforms were never intended to provide a source of additional revenue to either level of government. This is clear by the acceptance by the PLGC of revenue neutrality as a key principle.

Paper Purpose

The purpose of this Paper is to:

- present a recommended reform model to the PLGC that meets the objectives of the SLGFR project; and
- articulate the implementation task ahead, including legislative reform, timing and further stakeholder consultation.

RECOMMENDED REFORM MODEL

Recommendations – Issues Paper, Valuation and Rating of Crown Land Papers

Throughout the SLGFR project, the PLGC has endorsed the following recommendations.

Issues Paper –

- That financial reform between State and Local Government include the application of reciprocal taxation (the removal of exemptions from State Government taxes and Local Government rates) and the removal of the Library Levy and the Local Government Planning Levy.

Valuation Paper –

- That all land be identified, but that national parks, forest reserves, world heritage areas and other conservation areas not be valued as there is no intention that these areas are to be rated.

Rating Paper –

- That the rating of Crown land should be based on land usage, rather than ownership.

- That exclusively non-commercial and public purpose assets of the Crown and Local Government should be quarantined from rating and taxation liability. This would encompass:

  - national parks, forest reserves, conservation reserves, public parks and recreation areas; and

  - roads, bridges and associated infrastructure, including railway line corridors.

- That State Government occupations of Crown land that have a dual usage (i.e. both commercial and for public benefit) should be liable for both a general rate and service rates (where services are provided). The application of a true market valuation, which reflects the financial disadvantages of this obligation to meet public good or non-commercial considerations, should produce a discount for such rates liabilities.

- That the rating liability of Hydro Tasmania should not result in it being placed at a competitive disadvantage with its competitors. This is likely to be the case if a traditional rating approach was adopted. Therefore, some alternative rating methodology should be applied consistent with that faced by Hydro Tasmania's competitors, such as a rates equivalent regime.

- That as the application of rating policy is contingent on valuation policy, reform to the valuation of Crown land will need to occur at the same time as rating policy reform.

The *Issues*, *Valuation* and *Rating of Crown Land Papers* defined the scope and range of financial transactions to be subject to reform.

Forestry and Hydro

Particular consideration was given to the appropriate treatment of Forestry Tasmania and Hydro Tasmania as both have large land holdings that are also used for some non-commercial activities.

Forestry Tasmania

Forestry Tasmania will be subject to full rating on its plantations, production forests, urban land, buildings and other infrastructure where this is not already applied. All forest reserves are to be treated consistent with other public recreation parks and not subject to rating, given the non-commercial, public good nature of assets in these areas.

Hydro Tasmania

Hydro Tasmania will not be subject to a standard rating approach, as to do so would place it at a significant disadvantage compared to its competitors, given its highly capital-intensive asset structure. Rather, an alternative rating methodology is to be applied consistent with that faced by Hydro Tasmania's competitors, through the development of a rates equivalent regime, the proceeds of which will be retained by the State Government.

Hydro Tasmania has been excluded from the revenue neutrality calculations principally on the basis that it will need to be dealt with separately to this reform process, but also because including it would make revenue neutrality at both the sector level and individual council level very difficult to achieve.

THE ACHIEVEMENT OF REVENUE NEUTRALITY

In assessing revenue neutrality, tolerance limits have been established. Sector level tolerances for budget impact have been set at $2 million to the detriment of State Government and $500 000 to the detriment of Local Government. These revenue limits expressed as a percentage of State Government and Local Government own-source revenue (on a GFE basis) equate to 0.14 per cent in both cases. In terms of revenue neutrality at the individual council level, the tolerance has been set at a maximum shortfall of 1.0 per cent of total own-source revenue, with there being no cap set on the estimated upside.

It is estimated that revenue neutrality will be achieved between the two levels of government. Financial modelling of the proposed reforms indicates a net position of $2.183 million in favour of Local Government. This would translate into a $1.732 million cost for the General Government (or Budget sector). These estimates are based on the 1999-00 financial year and excludes Hydro Tasmania from the requirement to pay rates.

Appendix 2 summarises the financial impact of the proposed reforms on individual councils, in both dollar value and expressed as a percentage of own-source revenue. All councils fall within the agreed tolerance limit in the *Revenue Neutrality Paper*. That is, the financial loss to any individual council is estimated to be within 1 per cent of own-source revenue.

As would be expected, those councils which have large areas of State forest within their boundaries or significant Government properties, such as schools and hospitals and Government offices are the main beneficiaries of the proposed reforms under the SLGFR project. All but three councils will be better off in terms of the net budget impact of the reforms.

Based on 1999-00 values, the Glenorchy City Council is estimated to experience a loss of $243 000 or 0.76 per cent of its own-source revenue arising from the reforms under the SLGFR project. Other councils that are likely to experience losses from the reforms are the Devonport City Council ($140 000 or 0.60 per cent of own-source revenue) and the Central Coast Council ($12 000 or 0.08 per cent of own-source revenue).

It should be recognised that since 1999-00, there have been reductions in payroll tax and land tax rates that will partially offset shortfalls experienced by some councils as a result of the SLGFR reforms. In addition, all councils, with the exception of one, have increased their general rates in the dollar since 1999-00, resulting in higher rate revenue than allowed for in this analysis.

Nonetheless, the State Government is concerned that Glenorchy and Devonport will be required to bear a disproportionate share of the cost of the reforms and that it will take time for these councils to adjust to the financial impact of the reforms. In these circumstances, the State Government has agreed to provide transitional assistance.

The impact of this financial assistance is illustrated in Appendix 2.

IMPLEMENTATION

Legislative Amendment

Should the PLGC endorse the final reform model as proposed by the review, legislative amendments will be necessary to give effect to the reforms. While not an exhaustive list, legislative amendments will, principally, be required to the:

- *Land Tax Act 2000*, *Payroll Tax Act 1971 Stamp Duties Act 1931*, *Motor Vehicles Taxation Act 1981*;
- *Local Government Act 1993;*
- *Libraries Act 1984; and*
- *Valuation of Land Act 2001.*

Legislative amendments will need to occur simultaneously to ensure that all revenue measures commence at the same time.

There will be substantial work for both State and Local Government in establishing necessary administrative processes to support and underpin reform options that are to be implemented. This is in addition to any legislative reform. For example, for State Government, it will be necessary to value Crown land which is not currently valued.

Further Stakeholder Consultation

Consultation with local councils and key State Government departments, including the Office of the Valuer-General, has been an ongoing and necessary feature of the SLGFR project. Importantly, it will be necessary to continue to consult with these stakeholders during the implementation phase of the SLGFR project reforms. In particular, the State will consult with Local Government in drafting the legislative amendments.

Timing

In the event that the PLGC endorses the final reform model for the SLGFR project, legislative amendments will be progressed during the Spring Session 2003 of Parliament, with a 1 July 2004 commencement date for the reforms.

This timing will allow for financial system adjustments by councils and State Government agencies and authorities and other necessary facilitation tasks to support the introduction of the reforms.

RECOMMENDATION

It is recommended that the PLGC:

- Note the assessment of revenue neutrality between the two levels of government and among councils provided in this Paper;
- Endorse the following reform model:

- the full application of State Government taxes on Local Government and of council rates on State Government land with the exception that:
  - national parks, forest reserves, conservation areas, public parks and roads, bridges and associated infrastructure (including railway line corridors) be exempt from rates; and
  - parks and gardens held by Local Government be exempt from land tax;

- the abolition of the Library and Local Government Planning levies; and

- the complete identification and classification of all Crown land;

- the valuation of all Crown land that is required to be rated;

- Hydro Tasmania's Crown land occupations which are not currently rated to be exempt from rating but subject to a rates equivalent regime, the revenue from which will be retained by the State Government; and

- Note that legislative amendments to facilitate the recommended reform model will need to be introduced in the Spring Session of Parliament 2003 to allow for a 1 July 2004 commencement of the reforms.

APPENDIX 1: MEMBERSHIP OF THE SLGFR WORKING GROUP

Wendy Sawford - Department of Treasury and Finance (Joint Chair)
Allan Garcia – Local Government Association of Tasmania (Joint Chair)
Marguerite Scott – Department of Premier and Cabinet
Michael Tidey – Launceston City Council
Frank Barta – Clarence City Council
Paul West – Waratah-Wynyard Council
Stephen Mackey – Derwent Valley Council
Damien Febey – Department of Treasury and Finance

Executive Support – Kim Besharati (Department of Treasury and Finance)

APPENDIX 2: ESTIMATED FINAL IMPACTS ON COUNCILS

Council	1999-00		2002-03[b]		
	Net effect[a] 1999-00 $'000	Percentage of own source revenue 1999-00 %	Benefit – lower taxes since 1999-00 $'000	Benefit – movement in rate in the dollar since 1999-00 $'000	Net effect 2002-03 $'000
BREAK O'DAY	**127**	3.32	-27	10	**165**
BRIGHTON	**119**	1.69	-29	9	**157**
BURNIE	**41**	0.21	-49	75	**165**
CENTRAL COAST	**-12**	-0.08	-39	6	**33**
CENTRAL HIGHLANDS	**128**	5.72	-27	6	**161**
CIRCULAR HEAD	**216**	2.79	-30	21	**266**
CLARENCE	**41**	0.15	-51	41	**134**
DERWENT VALLEY	**168**	2.88	-31	6	**205**
DEVONPORT	**-140**	-0.60	-47	25	**-69[c] / 0[d]**
DORSET	**92**	2.15	-29	18	**140**
FLINDERS	**21**	1.87	-1	4	**26**
GEORGE TOWN	**91**	1.71	-28	8	**128**
GLAMORGAN/SPRING BAY	**75**	1.87	-28	8	**112**
GLENORCHY	**-243**	-0.76	-60	17	**-167[c] / 0[d]**
HOBART	**201**	0.35	-95	197	**494**
HUON VALLEY	**93**	1.11	-99	5	**197**
KENTISH	**20**	1.01	-28	5	**54**
KING ISLAND	**14**	0.58	-27	8	**49**
KINGBOROUGH	**74**	0.40	-40	24	**138**
LATROBE	**105**	1.91	-1	4	**110**
LAUNCESTON	**241**	0.43	-83	83	**407**
MEANDER	**202**	2.21	-31	8	**241**
NORTHERN MIDLANDS	**70**	1.04	-38	11	**120**

SORELL	**16**	0.25	-30	15	**62**
SOUTHERN MIDLANDS	**34**	1.11	-28	6	**69**
TASMAN	**20**	1.26	-28	10	**58**
WARATAH/WYNYARD	**124**	1.47	-30	7	**162**
WEST COAST	**138**	2.97	-29	25	**192**
WEST TAMAR	**105**	1.00	-33	16	**154**
	$2,183		-1,096	681	**$3,960[c] / $4,196[d]**

[a] Excludes unallocated Crown land, with an estimated value of $1.075 million.

[b] The figures for 2002-03 are based on valuation and activity levels reported in the survey for the year 1999-00. This data has been adjusted using 2002-03 rates in the dollar and state government tax rates. The figures are not intended to estimate the impact of the reforms in 2002-03 as this would require a full update of the 1999-00 base survey data. The figures in the table are shown to give an indication of the movement in council rates and State Government taxes since 1999-00 and to determine the level of transitional assistance for Glenorchy and Devonport Councils.

[c] Before transitional assistance.

[d] After transitional assistance.

EPA and LGAT MoU 2023-28
Annual Action Plan

ENVIRONMENT PROTECTION AUTHORITY

Attament to item 4.3.3

Annual Action Plan

The MoU specifies that the annual action plan will:

- Be produced each year for the term of the MoU
- Specify the activities the parties will undertake to further the strategic priorities
- Provide a short description of each activity and identify who will lead, who will support, how success will be measured and timeframe for completion
- Follow the financial year business planning cycle with LGAT and the EPA to commence drafting in March and finalise by the end of May
- Be tabled at the first LGAT General Meeting in the new financial year
- Become the workplan for the EPA's Local Government Engagement Program

Annual action plan is provided on the following pages.

Working Group

The MoU also states that a working group comprising LGAT and EPA officers will:

- Meet quarterly to develop, oversee, and review progress with the annual action plan and address any issues that arise, including new matters that may require consideration such as Strategic Priorities
- Be chaired in rotation by the Policy Director, LGAT and the Director Environmental Regulation, EPA, who will also brief their respective Chief Executive Officers after each quarterly meeting
- The EPA will provide meeting coordination, minute taking and other secretariat services for the quarterly meetings
- Provide information on key activities under the MoU for the annual reports for their respective organisations, to councils and where appropriate otherwise promote joint work on their websites and in other corporate communications

EPA and LGAT MoU 2023-28
Annual Action Plan

ENVIRONMENT PROTECTION AUTHORITY

Annual Action Plan – June 2025

Strategic Priority	Description	Lead Agency	SMART Goals	Status
1. Environmental Complaints, Incident Preparedness and Response	Councils and EPA routinely deal with environmental complaints and incidents, liaise on complaint referrals, share information, or provide on ground support to each other. They will continue to work together in this way and strengthen collaboration.	EPA LGEP Project Manager and Senior Project Officer Coordination role	• Burn Brighter This Winter – annual invitation to share resources on council social media and EPA website promotion • Investigations PD Seminar • Odour Log • Noise Log • Investigation into training for builders around ways to reduce noise/dust/wastewater from construction sites	• Invitation sent to LGAT to share BBTW resources • Planning underway for Investigations seminar to EHOs at EHA State Conference Sept 2025 • Odour Log complete and on the Portal • Noise Log development underway • Meeting with CBOS held
2. Illegal Dumping	Introduction in 2022 by the Tasmanian Government of a levy on waste taken to landfills to encourage reuse and recycling and support a circular economy may also exacerbate unlawful disposal of waste. The EPA will design and lead an illegal dumping compliance and enforcement function which will include engagement and where possible, joint work with councils.	EPA LGEP Project Manager and Senior Project Officer Coordination role EPA Investigation and Enforcement Section Delivery	• PD Seminar to EHOs at professional development Day • LGAT Webinar to Waste Officers	• Planning underway • Planning underway

Strategic Priority	Description	Lead Agency	SMART Goals	Status
3. Environmental Investigations and Prosecutions	The EPA routinely liaises with and seeks advice and information from councils during its investigations into potential breaches of EMPCA and other environmental legislation. Similarly, councils may request advice or information from the EPA during environmental investigations they lead. Councils and the EPA will continue to work together in this way. The EPA, while investigating potential contraventions of legislation it administers, may also discover potential breaches of a development permit under section 63(3) LUPAA. In this event, the EPA may take carriage of the LUPAA offence, alongside any breach of EMPCA, rather than referring the LUPAA breach to council, yielding a more efficient use of public resources.	EPA – Strategic and Legal Services	• LUPAA Breaches while investigating EMPCA Offences discussion paper • Procedure on how to implement the investigation of offences and enforcement of legislation developed	• Draft Discussion Paper developed • Procedure delayed

Strategic Priority	Description	Lead Agency	SMART Goals	Status
4. Capability Building	**Rationale** Councils and the EPA both stand to benefit, better understand and support each other's environmental regulatory business by undertaking joint capability and skills development. This will be based on existing and new data describing the local government workforce engaged in EMPCA and LUPAA across the state. The description, to be developed by LGAT, will include how officers are employed and an overall workforce profile. An annual calendar of capability building and professional development opportunities and products will be formulated under the MoU and made available to all councils and EPA staff.	EPA – Local Government Engagement Program	• Develop an online portal with shared access by EPA and Councils • Provide relevant information such as Council Alerts, case studies, and other information products for common environmental issues • Provide a training calendar with a schedule for Professional Development days and other capability building activities • Record presentations and training activities - where possible - for accessibility • Provide easy to find regulation tools • Provide email contact for regulatory advice	• Portal launched Feb 2023 • 85 Members May 2025 • LGEP Directions Paper completed • Odour diary completed • Noise Diary underway • PD sessions ongoing at EHA PD Days and conferences • Case Study Template complete • Case Studies on Portal • Recorded PD sessions on portal • LGE@epa regulatory advice email ongoing • A-Z regulatory advice on Portal

Strategic Priority	Description	Lead Agency	SMART Goals	Status
5. Capacity	LGAT will work with the EPA, other key agencies such as Public Health Tasmania and Consumer Building and Occupational Services, to develop an understanding of individual council capacity and the relevant local government workforces ability to respond to regulatory obligations under legislation including EMPCA, LUPAA, Building Act, and the Public Health Act. This work will consider, and complement, relevant recommendations of the Local Government Board's Future of Local Government Review and the *A workforce development strategic plan for Environmental Health Officers* (2020). This shared understanding will help the key State agencies support councils in fulfilling their regulatory obligations under the legislation identified above.	LGAT	• Consider and complement relevant work under LG Board's "Future of LG Review"	• LGAT submission to FOLGR • Government response provided no additional resourcing • This activity is closed.

Strategic Priority	Description	Lead Agency	SMART Goals	Status
6. National Standard Implementation	The National Standard for Environmental Risk Management of Industrial Chemicals (IChEMS) is an important COAG reform intended to result in improved and consistent management of environmental risks posed by industrial chemicals. Commonwealth legislation to create an IChEMS chemical register was passed in 2021 which establishes risk-based schedules, mechanisms for assessing which schedule a chemical spill falls into, and for prescribing risk management measures. IChEMS is led by the Australian Government. The EPA and the Department of Natural Resources and Environment are working on implementation arrangements for IChEMS in Tasmania and will commence promotion and awareness raising for councils and other stakeholders in 2023.	EPA - LGEP	• IChEMS Framework for risk information session at Professional Development Day • Recording of information session placed on EPA/LG portal	• IChEMS information session provided • IChEMS recording on Portal • Further updates as needed • PFAS NEMP v3.0 update on Portal

Strategic Priority	Description	Lead Agency	SMART Goals	Status
7. Collaboration on more complex development applications and regulation	Some Councils need extra resources and expertise support to assist with more complex development applications and regulation. EPA will continue to provide guidance on more complex development applications and regulation activities. The parties will work together to identify the best way to share the lessons learnt from more complex development applications. The EPA has a Regulatory Strategy to consider high-risk focus areas not currently being addressed by usual regulatory work. One of these areas includes the unauthorised expansion of quarries and extractive industries that have exceeded Level 1 production limits and are operating as a Level 2 without authorisation.	EPA - LGEP	• Share complex regulatory knowledge through Case Study Template on Portal • And through presentations at Professional Development Days • LGEP to provide ongoing regulatory support via lge@epa email	• Case Study Template developed • Case studies on Portal • Regulatory advice provided via lge@epa email • EMPCA Level 2 Assessments 101 – 2 LGAT Webinars planning underway

Annual General Meeting Agenda

Friday 25 July 2025 2:00 pm

Boathouse Centre, 55a Lindsay Street, Invermay

326 Macquarie Street, GPO Box 1521, Hobart, Tas 7000

Phone: (03) 6146 3740

Email: admin@lgat.tas.gov.au

Home Page: http://www.lgat.tas.gov.au

Our Vision

To build stronger Councils

Our Mission

Provide leadership, support,
representation and advocacy
on behalf of Tasmanian Councils

Our Values

Effective

Supportive

Rewarding

Integrity

Adaptive

Table of Contents

1. Opening and acknowledgement of country 5

2. Items for decision 5

2.1. Confirmation of minutes * 5

2.2. President's Report 5

2.3. Financial statements to 30 June 2024 * 6

2.4. 2025-2026 LGAT Budget and Subscriptions * 6

2.5. President and vice president honorariums 8

2.6. Reports From Board Representatives * 9

3. Closure of the meeting 9

* Denotes Attachment

Formal notice of meeting

Notice is given that the one hundred and thirteenth Annual General Meeting of the Association will be held on

25 July 2025

Commencing at the conclusion of the General Meeting

Boathouse Centre, 55a Lindsay Street, Invermay



Dion Lester
Chief Executive Officer

Annual General Meeting

25 July 2025

1. Opening and acknowledgement of country

We acknowledge the traditional custodians of this land Tasmania, the Palawa people, and recognise their continuing connection to the lands, skies, and water. We pay respect to the elders, past and present.

2. Items for decision

2.1. Confirmation of minutes *

Decision sought

That the Minutes of the 112th Annual General Meeting held on 26 July 2024 be confirmed.

The minutes of the 112th Annual General Meeting of the Local Government Association of Tasmania, held in Devonport on 26 July 2024 as circulated and as at **Attachment to Item 2.1** are submitted for confirmation.

2.2. President's Report

Decision sought

That the President's report be received.

The President will present his report to the 2025 Annual General Meeting.

2.3. Financial statements to 30 June 2024 *

Decision sought

That the financial statements for the period 1 July 2023 to 6 June 2025 be received and adopted.

The General Management Committee recommends consideration and adoption of the Association's Financial Statements for the period 1 July 2023 to 30 June 2024, an abridged version of which are included at **Attachment to Item 2.3A.**

A full version is available from the Association's offices on request.

A copy of the Association's Profit and Loss report for the period 1 July 2024 to 6 June 2025 is also included at **Attachment to Item 2.3B** to provide members with an indication of the current financial position of the Association, noting that there are a number of income and cost items still to accrue before the end of the financial year. It is currently anticipated that the 2024/25 financial year result will be an approximate $250,000 surplus against a budgeted $83,229 deficit.

This result is predominantly due to additional revenue from LGAT Procurement (expected to total $117,000) and interest earned ($76,000) and reduced staff expenditure ($222,000) due to delays in filling two positions.

2.4. 2025-2026 LGAT Budget and Subscriptions *

Decision sought

That the committee endorse the 2025-26 LGAT Budget and Subscriptions with an overall 4% subscription increase for councils.

Income

LGAT relies on four main sources of revenue – subscriptions, procurement, events and interest on reserves. With continuing strengthening of procurement and interest revenue streams we are able toapply a modest increase 4% in subscriptions while still maintaining sufficient revenue to provide a continued high level of service to councils.

For the year-to-date, income is tracking ahead of budget.

LGAT Procurement revenue continues to increase steadily. Year to date income is $92,748 ahead of budget. This growth is expected to continue next financial year, with a budgeted income of $350,000.

Interest rates improved during 2024-25, resulting in additional revenue of $36,287 in the year to date. This revenue is budgeted to be $175,000 for the 2025-26 financial year.

The 2024-25 income for events was slightly ahead of budget ($16,323) and is expected to remain steady for the year ahead.

As a number of State Government funded programs are coming to conclusion, cost recovery revenue for administration is expected to reduce by $30,000 in 2025-26 but still constitutes $160,000.

Total income is budgeted to increase by $106,047.

Expenditure

For the year-to-date, expenditure is tracking below budget.

The most significant expenditure item in the LGAT budget is staff wages. During the past 12 months LGAT has seen some delays in recruiting to new positions, as a result salary costs are expected to finish well ahead of budget ($222,000). This year a 3.5% salary increase is proposed.

The main cost increase for the 2025-26 financial year is associated with LGAT taking on the running of the Learning and Development Framework. This includes an additional staff member, software purchasing, transition and event costs totalling $210,000. While some of the costs (~$56,000) can be offset from residual grant funding, the remainder must come out of general revenue.

As a result, total expenditure is budgeted to increase by $216,911.

Other Matters

In addition to the budgeted staff salaries, LGAT has over four FTE funded by State Government Grants across a range of projects – the Regional CCTV Project, Health and Wellbeing Project, Climate Capability Program, Child and Youth Safe Program, the Community of Practice and Open Spaces Program.

The draft 2025-26 LGAT Budget does not include the revenue or costs associated with these additional staff, as they are fully funded by external sources and not the sector.

Net Result

The proposed budget will deliver an anticipated deficit of $194,093. However, a likely surplus in 2024-25 will offset this deficit.

Subscriptions

This LGAT subscription formula comprises a flat fee of (40%) and population and revenue fees of (30%) each, eight revenue categories and eight population categories and a (10%) collar and cap.

A 4% increase in overall subscriptions has been budgeted for 2025-26. In addition, there are several councils that have had category movements, although the impact of this movement is mitigated by the cap and collar adjustments. The changes involve Break O'Day, Dorset, Kingborough and West Coast moving up a revenue category and George Town moving down a revenue category.

A copy of the draft budget and subscriptions for the 2025-26 financial year are as at **Attachment to Item 2.4.**

2.5. President and vice president honorariums

Decision sought

That the president's and vice president's honorariums for the period 1 July 2025 to 30 June 2026 be adjusted in accordance with the annual increase (March 2025 quarter) in the wage price index for Tasmania.

That the GMC sitting fees for the period 1 July 2025 to 30 June 2026 be adjusted in accordance with the annual increase (March 2025 quarter) in the wage price index for Tasmania.

As per the Rules of the Association the functions of the Annual General Meeting include –

8. (a)(iv) (A) determine the President's honorarium for the forthcoming year;

(B) determine any honorarium to be paid to the Vice President for the forthcoming year;

The Rules of the Association provide that the Annual General Meeting will grant an annual allowance to the President and Vice President.

In the past an independent review of honorariums was undertaken in the same financial year as the review of allowances for Local Government Elected Members, with the last review undertaken in 2009. The result of that review was to retain the basis of the present honorariums unchanged for the two positions with movements to be in conjunction with the annual increase (March 2025 quarter) in the wage price index for Tasmania.

The resultant application of the wages price index means the allowances will be adjusted by 4.0% for 2025-26.

	2024/2025 Allowance	2025/2026 Allowance
President	$57,600	$59,904
Vice President	$14,399	$14,975

In addition, Member endorsement is sought for the GMC sitting fees to be adjusted by the annual increase (March 2025 quarter) in the wage price index for Tasmania, as per past practice, taking the full GMC sitting fee to $238.00 for the 2025-26 financial year.

2.6. Reports From Board Representatives *

Decision sought

1. **That the reports from representatives on various bodies be received and noted.**
2. **That Members acknowledge the time and effort put in by all Association representatives on boards, working parties, advisory groups and committees etc.**

The Association has representatives on a wide variety of boards and committees and in order to acknowledge all, a full list is at **Attachment to Item 2.6A**.

Representatives on statutory boards are requested to provide reports to be included in the Annual General Meeting papers of the Association and these are also available at **Attachment to Item 2.6B**.

3. Closure of the meeting

Attachment to item 2.1

Local Government Association Tasmania

Annual General Meeting

Minutes

of the

One Hundred and Twelfth Session of the Association

Held on

26 July 2024

Commencing at 2:57 pm

Paranaple Convention Centre, Devonport

DRAFT

TABLE OF CONTENTS

1 MINUTES OF 111TH ANNUAL GENERAL MEETING * 5

2 PRESIDENT'S REPORT 5

3 FINANCIAL STATEMENTS TO 30 JUNE 2023 * 5

4 2024-2025 LGAT BUDGET AND SUBSCRIPTIONS * 6

5 PRESIDENT AND VICE PRESIDENT HONORARIUMS 8

6 GMC ALLOWANCES 9

7 REPORTS FROM BOARD REPRESENTATIVES * 11

8 CLOSURE 11

* Denotes Attachment

DRAFT

FORMAL NOTICE OF MEETING

Notice is given that the One Hundred and Twelfth Annual General Meeting of the Association will be held on

26 July 2024

Commencing at

2:30 pm

Paranaple Convention Centre, Devonport

DRAFT

Dion Lester
CHIEF EXECUTIVE OFFICER

2024 ANNUAL GENERAL MEETING

The President, Mayor Mick Tucker, welcomed Members and declared the meeting open at 2:57 pm.

We acknowledged the traditional custodians of this land Tasmania, the Palawa people, and recognised their continuing connection to the lands, skies, and water. We paid respect to the elders, past and present.

Apologies were received from:

Mayor Cheryl Fuller	Central Coast Council
Mayor Michelle Dracoulis	Derwent Valley Council
Mayor Cheryl Arnol	Glamorgan/Spring Bay Council
General Manager Tim Kirkwood	Southern Midlands Council
CEO Ian Nelson	Clarence City Council
General Manager Jason Browne	Latrobe/Kentish Council
Mayor Marcus Blackie	King Island Council
Mayor Brendan Blomeley	Clarence City Council
General Manager James Dryburgh	Brighton Council
General Manager Des Jennings	Northern Midlands Council
General Manager Tony McMullen	Glenorchy City Council
Mayor Peter Freshney	Latrobe Council

DRAFT

1 MINUTES OF 111TH ANNUAL GENERAL MEETING *

George Town Council / Kentish Council

That the Minutes of the 111th Annual General Meeting, held 30 June 2023 be confirmed.

Carried unanimously

The Minutes of the 111th Annual General Meeting of the Local Government Association of Tasmania, held in Hobart on 30 June 2023, as circulated, are submitted for confirmation.

The Minutes are at **Attachment to Item 1**.

2 PRESIDENT'S REPORT

Northern Midlands Council / West Tamar Council

That the President's report be received.

Carried

The President will present his report to the 2024 Annual General Meeting.

3 FINANCIAL STATEMENTS TO 30 JUNE 2023 *

Kingborough Council / Huon Valley Council

That the Financial Statements for the period 1 July 2022 to 30 June 2023 be received and adopted.

Carried unanimously

The General Management Committee recommends consideration and adoption of the Association's Financial Statements for the period 1 July 2022 to 30 June 2023, an abridged version of which are included at **Attachment to Item 3A.**

A full version is available from the Association's offices on request.

A copy of the Association's Profit and Loss report for the period 1 July 2023 to 20 June 2024 is also included at **Attachment to Item 3B** to provide members with an indication of the current financial position of the Association, noting that there are a number of costs still to accrue before the end of the financial year. It is currently anticipated that the 2023/24 financial year result will be approximately a $228,000 surplus against a budgeted $9,200 deficit.

This result is predominantly due to additional revenue of $240,000, comprising additional interest and procurement and fees and commissions revenue.

4 2024-2025 LGAT Budget And Subscriptions *

Kingborough Council / Huon Valley Council

That Members endorse the 2024/2025 LGAT Budget and Subscriptions for an overall 3.5% subscription increase for councils.

Carried unanimously

Income

LGAT relies on four main sources of revenue – subscriptions, procurement, events and interest on reserves. With continuing strengthening of procurement and interest revenue streams we are able to apply a modest increase (3.5%) in subscriptions while still maintaining sufficient revenue to provide a continued high level of service to councils and also allowing for an additional two staff members to support the growth of LGAT Procurement.

LGAT Procurement revenue continues to increase steadily. Income for the 2023/2024 financial year was $75,000 above budget. This growth is expected to continue next financial year, albeit at a more modest rate. For the year ahead we are budgeting for income of $290,000.

Interest rates improved during 2023/2024, resulting in revenue of $97,000 above budget, or a total of $197,000 by the end of June 2024. This revenue is budgeted to be $150,000 for the 2024/2025 financial year given the speculation that interest rates could reduce during the next 12 months.

The 2023/2024 income from events was down on budget. This is due to a reduction in the revenue from the Annual Conference as a result of being hosted in Devonport. Attendance and revenue are expected to improve for 2024/2025.

In addition, because of the growth in grant funded positions at LGAT the revenue from admin cost recovery is projected to double (to $190,000) in the 2024/2025 budget.

Expenditure

The most significant expenditure item in the LGAT budget is staff wages. During the past 12 months LGAT has seen some delays in replacing staff or recruiting to new positions. At the same time, we also increased staff hours to deal with unexpected events, such as supporting councils with the introduction of the Child and Youth Safe Organisations Framework. This resulted in salary expenses finishing just under budget for 2023/2024.

The Hobart Consumer Price Index (CPI) during the March quarter 2024 was 3.1% and the Tasmanian Wage Price Index (WPI) was 4.32%. Increasingly the attraction and retention of key staff is becoming more competitive. This combined with the exceptional performance of the small, but highly productive team at LGAT, means a 4.5% salary increase is proposed.

While expenditure across most items is projected to increase marginally as a result of the general cost of business rising, there are the following items to note:

- Sector Service staff costs are now listed separately in the budget so that we can gauge the return on investment of some of our revenue generating activities (i.e. procurement and events).
- There will be no expenditure on the community satisfaction survey owing to this being put on hold.
- Additional superannuation costs associated with a 0.5% increase to the minimum superannuation guarantee.
- An increase in payroll tax due to total employee costs increasing beyond $2 million.
- A reduction in power costs as a result of switching to heat pumps for heating during this financial year.
- An increase in Annual Conference costs due to returning to the Grand Chancellor.

Other Matters

In addition to the budgeted staff salaries, LGAT has another five staff members fully or partially funded by State Government Grants – they are the Regional CCTV Project Manager, Health and Wellbeing Project Manager, Climate Capability Program Manager and two Child and Youth Safe positions. An additional one day per week of one staff member is funded by ResilientCo to support the roll out of the Minderoo Foundation funded Resilient Canopy in Tasmania. LGAT has commenced recruiting for an additional Launceston based position (for the Child and Youth Safe Organisations Framework), taking the total staff funded by the State Government to six for the 2024/2025 financial year.

The draft 2024/2025 LGAT Budget does not include the revenue or costs associated with these additional staff, as they are fully funded by external sources and not the sector.

Net Result
The proposed budget will deliver an anticipated deficit of $83,229. However, a surplus in 2023/2024 of over $200,000 will more than offset this deficit.

Subscriptions
This LGAT subscription formula comprises a flat fee of 40 per cent and population and revenue fees of 30 per cent each, eight revenue categories and eight population categories and a 10 per cent collar and cap.

A 3.5% increase in overall subscriptions has been budgeted for 2024/2025. In addition, there are several councils that have had category movements, although the impact of this movement is mitigated by the cap and collar adjustments. The changes involve Sorell and Tasman moving up a revenue category and Glamorgan Spring Bay in their second year of hitting a cap as a result of moving up a population category last year.

A copy of the Draft Budget and subscriptions for the 2024/2025 financial year are at **Attachment to item 4.**

President, Mick Tucker and Vice President, Paula Wriedt declared an interest in item 5 and departed the room.

Mayor Christine Holmdahl assumed the chair.

5 PRESIDENT AND VICE PRESIDENT HONORARIUMS

Devonport City Council / Burnie City Council

That the President's and Vice President's honorariums for the period 1 July 2024 to 30 June 2025 be adjusted in accordance with the movement in the Wages Price Index.

Carried unanimously

As per the Rules of the Association the functions of the Annual General Meeting include –

8. (a)(iv) (A) determine the President's honorarium for the forthcoming year;
(B) determine any honorarium to be paid to the Vice President for the forthcoming year;

The Rules of the Association provide that the Annual General Meeting will grant an annual allowance to the President and Vice President.

In the past an independent review of honorariums was undertaken in the same financial year as the review of allowances for Local Government Elected Members, with the last review undertaken in 2009. The result of that review was to retain the basis of the present honorariums unchanged for the two positions with movements to be in conjunction with the wages price index. This brought the escalation factor for honorariums in line with Elected Member allowances across councils.

The escalation factor used for elected member allowances remains the wages price index and it is deemed appropriate that the President and Vice President honorariums continue to escalate on the same basis.

The resultant application of the wages price index means the allowances will be adjusted in accordance with the WPI for 2024/2025.

	2023/2024 Allowance	**2024/2025 Allowance**
President	$55,173	$57,600
Vice President	$13,792	$14,399

GMC members Mayors Duniam, Knowles, Gray and Councillor Gibson declared an interest and departed the room.

Mayor Christine Holmdahl remained in the chair.

6 GMC ALLOWANCES

Southern Midlands Council / Clarence City Council

That Members endorse the proposed changes to the GMC members sitting fees.

Carried unanimously

Background

As per the Rules of the Association the functions of the Annual General Meeting include –

> *8. (a)(v) determine allowances, sitting fees and expenses for attendance by committee members at meetings of the General Management Committee and Sub-Committees for the forthcoming year*;

Members of the General Management Committee are entitled to a sitting fee.

Historically the GMC sitting fee has been a single amount, whether involving a meeting or briefing and irrespective of the duration. In recognition of the variable time and effort required to participate in a GMC meeting, versus receiving a briefing, the GMC determined at its May 2024 meeting to seek member endorsement for the adoption of the following sliding scale of allowances for GMC meetings / briefings:

Meeting Type	Meeting Duration	Allowance
GMC	1.5 hours or greater	100%
Briefing	2 hours or greater	100%
GMC	30 mins – 1.5 hours	50%
Briefing	Up to 2 hours	NA
GMC	Less than 30 minutes	NA

The current GMC sitting fee is $219.00.

In addition, Member endorsement is sought for the GMC sitting fees to be adjusted by the wages price index, as per past practice.

The same escalation factors are applied as outlined above, taking the full GMC sitting fee to $229.00 for the 2024/2025 financial year.

GMC members Mayors Duniam, Knowles, Gray and Councillor Gibson returned.

President, Mick Tucker and Vice President, Paula Wriedt returned.

President, Mick Tucker returned to the Chair.

DRAFT

7 REPORTS FROM BOARD REPRESENTATIVES *

Dorset Council / Kingborough Council

(a) That the reports from representatives on various bodies be received and noted.

(b) That Members acknowledge the time and effort put in by all Association representatives on boards, working parties, advisory groups and committees etc.

Carried unanimously

The Association has representatives on a wide variety of boards and committees and in order to acknowledge all, a full list is at **Attachment to Item 7A**.

Representatives on statutory boards are requested to provide reports to be included in the Annual General Meeting papers of the Association and these are also available at **Attachment to Item 7B.**

8 CLOSURE

There being no further business the President declared the meeting closed at 3:30 pm.

DRAFT

1. Minutes of 111th Annual General Meeting

Total Responses: 58

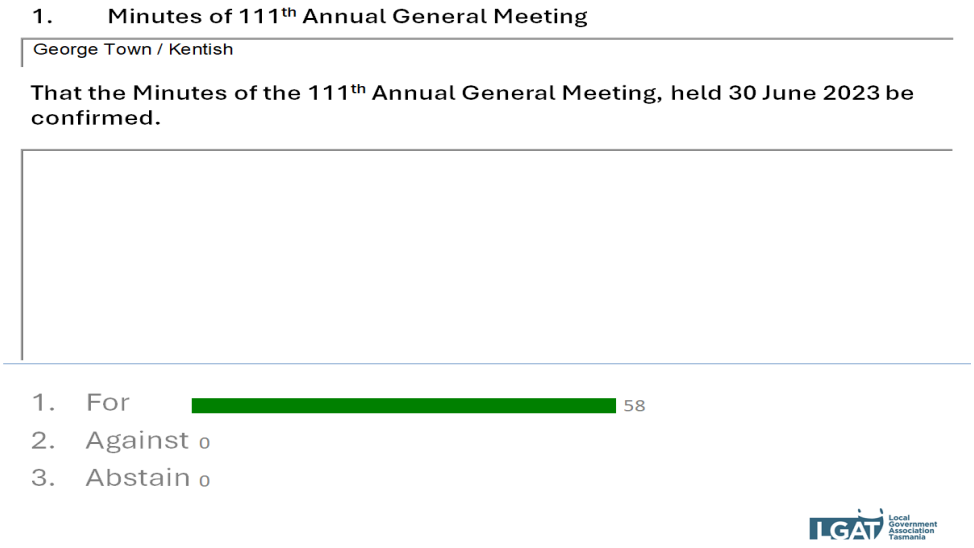

Participant	Response	Weight
Break O'Day Council	For	1
Brighton Council	For	2
Burnie City Council	For	3
Central Coast Council	For	3
Central Highlands Council	[No Response]	1
Circular Head Council	For	1
Clarence City Council	For	4
Derwent Valley Council	For	2
Devonport City Council	For	3
Dorset Council	For	1
Flinders Council	For	1
George Town Council	For	1
Glamorgan/Spring Bay Council	For	1

Glenorchy City Council	For	4
Hobart City Council	For	4
Huon Valley Council	For	2
Kentish Council	For	1
Kingborough Council	For	4
King Island Council	For	1
Latrobe Council	[No Response]	2
Launceston City Council	For	4
Meander Valley Council	For	3
Northern Midlands Council	For	2
Sorell Council	For	2
Southern Midlands Council	For	1
Tasman Council	For	1
Waratah - Wynyard Council	For	2
West Coast Council	For	1
West Tamar Council	For	3
President LGAT	[No Response]	0
CEO LGAT	[No Response]	0
Policy Director LGAT	[No Response]	0
Guest 1 LGAT	[No Response]	0
Guest 2 LGAT	[No Response]	0

2. President's report

Total Responses: 59

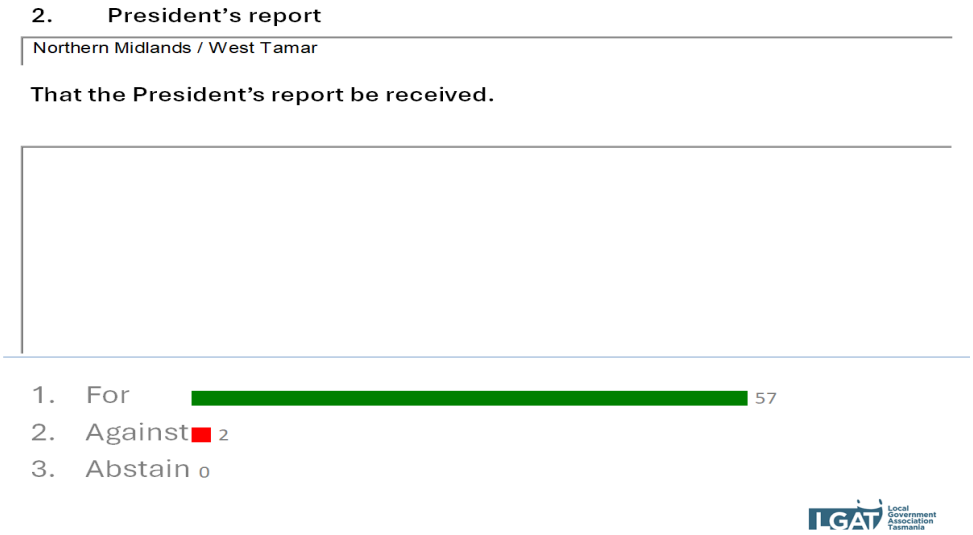

Participant	Response	Weight
Break O'Day Council	For	1
Brighton Council	Against	2
Burnie City Council	For	3
Central Coast Council	For	3
Central Highlands Council	For	1
Circular Head Council	For	1
Clarence City Council	For	4
Derwent Valley Council	For	2
Devonport City Council	For	3
Dorset Council	For	1
Flinders Council	For	1
George Town Council	For	1
Glamorgan/Spring Bay Council	For	1

Glenorchy City Council	For	4
Hobart City Council	For	4
Huon Valley Council	For	2
Kentish Council	For	1
Kingborough Council	For	4
King Island Council	For	1
Latrobe Council	[No Response]	2
Launceston City Council	For	4
Meander Valley Council	For	3
Northern Midlands Council	For	2
Sorell Council	For	2
Southern Midlands Council	For	1
Tasman Council	For	1
Waratah - Wynyard Council	For	2
West Coast Council	For	1
West Tamar Council	For	3
President LGAT	[No Response]	0
CEO LGAT	[No Response]	0
Policy Director LGAT	[No Response]	0
Guest 1 LGAT	[No Response]	0
Guest 2 LGAT	[No Response]	0

3. Financial statements to 30 June 2023

Total Responses: 59

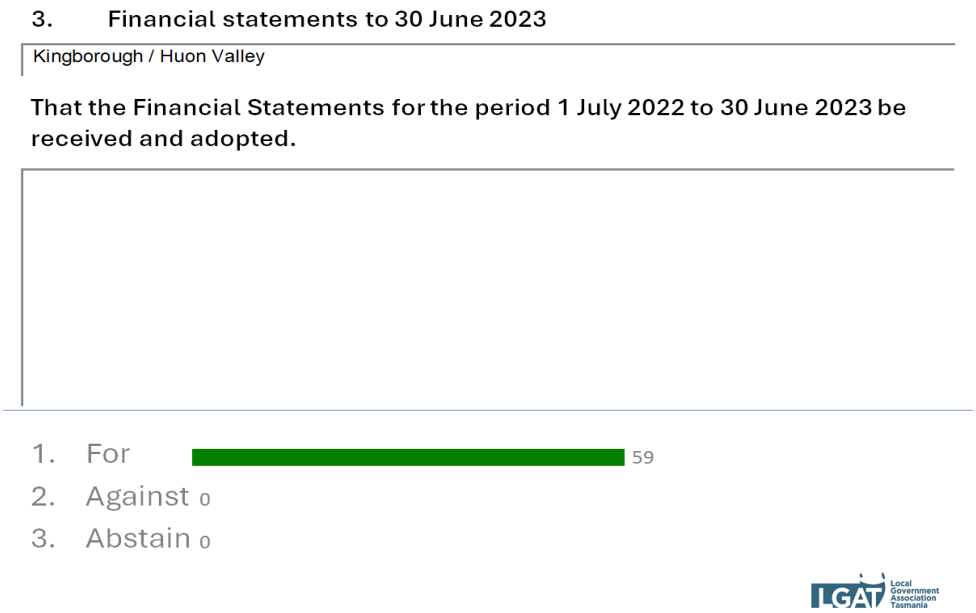

Participant	Response	Weight
Break O'Day Council	For	1
Brighton Council	For	2
Burnie City Council	For	3
Central Coast Council	For	3
Central Highlands Council	For	1
Circular Head Council	For	1
Clarence City Council	For	4
Derwent Valley Council	For	2
Devonport City Council	For	3
Dorset Council	For	1
Flinders Council	For	1
George Town Council	For	1

Glamorgan/Spring Bay Council	For	1
Glenorchy City Council	For	4
Hobart City Council	For	4
Huon Valley Council	For	2
Kentish Council	For	1
Kingborough Council	For	4
King Island Council	For	1
Latrobe Council	[No Response]	2
Launceston City Council	For	4
Meander Valley Council	For	3
Northern Midlands Council	For	2
Sorell Council	For	2
Southern Midlands Council	For	1
Tasman Council	For	1
Waratah - Wynyard Council	For	2
West Coast Council	For	1
West Tamar Council	For	3
President LGAT	[No Response]	0
CEO LGAT	[No Response]	0
Policy Director LGAT	[No Response]	0
Guest 1 LGAT	[No Response]	0
Guest 2 LGAT	[No Response]	0

4. 2024-2025 LGAT Budget and Subscriptions

Total Responses: 59

4. 2024-2025 LGAT Budget and Subscriptions

Kingborough / Huon Valley

That Members endorse the 2024/2025 LGAT Budget and Subscriptions for an overall 3.5% subscription increase for councils.



Participant	Response	Weight
Break O'Day Council	For	1
Brighton Council	For	2
Burnie City Council	For	3
Central Coast Council	For	3
Central Highlands Council	For	1
Circular Head Council	For	1
Clarence City Council	For	4
Derwent Valley Council	For	2
Devonport City Council	For	3
Dorset Council	For	1
Flinders Council	For	1
George Town Council	For	1

Glamorgan/Spring Bay Council	For	1
Glenorchy City Council	For	4
Hobart City Council	For	4
Huon Valley Council	For	2
Kentish Council	For	1
Kingborough Council	For	4
King Island Council	For	1
Latrobe Council	[No Response]	2
Launceston City Council	For	4
Meander Valley Council	For	3
Northern Midlands Council	For	2
Sorell Council	For	2
Southern Midlands Council	For	1
Tasman Council	For	1
Waratah - Wynyard Council	For	2
West Coast Council	For	1
West Tamar Council	For	3
President LGAT	[No Response]	0
CEO LGAT	[No Response]	0
Policy Director LGAT	[No Response]	0
Guest 1 LGAT	[No Response]	0
Guest 2 LGAT	[No Response]	0

5. President and Vice President Honorariums

Total Responses: 55

5. President and Vice President Honorariums

Devonport / Burnie

That the President's and Vice President's honorariums for the period 1 July 2024 to 30 June 2025 be adjusted in accordance with the movement in the Wages Price Index.

President and Vice President declared an interest and departed the room -



Participant	Response	Weight
Break O'Day Council	For	1
Brighton Council	For	2
Burnie City Council	For	3
Central Coast Council	For	3
Central Highlands Council	For	1
Circular Head Council	For	1
Clarence City Council	For	4
Derwent Valley Council	For	2
Devonport City Council	For	3
Dorset Council	For	1
Flinders Council	For	1

George Town Council	For	1
Glamorgan/Spring Bay Council	For	1
Glenorchy City Council	For	4
Hobart City Council	For	4
Huon Valley Council	For	2
Kentish Council	For	1
Kingborough Council	[No Response]	4
King Island Council	For	1
Latrobe Council	[No Response]	2
Launceston City Council	For	4
Meander Valley Council	For	3
Northern Midlands Council	For	2
Sorell Council	For	2
Southern Midlands Council	For	1
Tasman Council	For	1
Waratah - Wynyard Council	For	2
West Coast Council	For	1
West Tamar Council	For	3
President LGAT	[No Response]	0
CEO LGAT	[No Response]	0
Policy Director LGAT	[No Response]	0
Guest 1 LGAT	[No Response]	0
Guest 2 LGAT	[No Response]	0

6. GMC Allowances

Total Responses: 51

6. GMC Allowances

Southern Midlands / Clarence

That Members endorse the proposed changes to the GMC members sitting fees.

GMC Members departed the meeting -

1. For 51
2. Against 0
3. Abstain 0

Participant	Response	Weight
Break O'Day Council	For	1
Brighton Council	[No Response]	2
Burnie City Council	For	3
Central Coast Council	For	3
Central Highlands Council	For	1
Circular Head Council	For	1
Clarence City Council	For	4
Derwent Valley Council	For	2
Devonport City Council	For	3
Dorset Council	For	1
Flinders Council	For	1
George Town Council	For	1

Glamorgan/Spring Bay Council	For	1
Glenorchy City Council	For	4
Hobart City Council	For	4
Huon Valley Council	For	2
Kentish Council	For	1
Kingborough Council	[No Response]	4
King Island Council	For	1
Latrobe Council	[No Response]	2
Launceston City Council	For	4
Meander Valley Council	For	3
Northern Midlands Council	[No Response]	2
Sorell Council	For	2
Southern Midlands Council	For	1
Tasman Council	For	1
Waratah - Wynyard Council	For	2
West Coast Council	For	1
West Tamar Council	For	3
President LGAT	[No Response]	0
CEO LGAT	[No Response]	0
Policy Director LGAT	[No Response]	0
Guest 1 LGAT	[No Response]	0
Guest 2 LGAT	[No Response]	0

7. Reports from Board Representatives

Total Responses: 59

7. Reports from Board Representatives

Dorset / Kingborough

(a) That the reports from representatives on various bodies be received and noted.

(b) That Members acknowledge the time and effort put in by all Association representatives on boards, working parties, advisory groups and committees etc.

GMC members returned to the room.

1. For 59
2. Against 0
3. Abstain 0

Participant	Response	Weight
Break O'Day Council	For	1
Brighton Council	For	2
Burnie City Council	For	3
Central Coast Council	For	3
Central Highlands Council	For	1
Circular Head Council	For	1
Clarence City Council	For	4
Derwent Valley Council	For	2
Devonport City Council	For	3
Dorset Council	For	1
Flinders Council	For	1
George Town Council	For	1

Glamorgan/Spring Bay Council	For	1
Glenorchy City Council	For	4
Hobart City Council	For	4
Huon Valley Council	For	2
Kentish Council	For	1
Kingborough Council	For	4
King Island Council	For	1
Latrobe Council	[No Response]	2
Launceston City Council	For	4
Meander Valley Council	For	3
Northern Midlands Council	For	2
Sorell Council	For	2
Southern Midlands Council	For	1
Tasman Council	For	1
Waratah - Wynyard Council	For	2
West Coast Council	For	1
West Tamar Council	For	3
President LGAT	[No Response]	0
CEO LGAT	[No Response]	0
Policy Director LGAT	[No Response]	0
Guest 1 LGAT	[No Response]	0
Guest 2 LGAT	[No Response]	0

Attachment to item 2.3A

Annual Financial Statements

LOCAL GOVERNMENT ASSOCIATION OF TASMANIA
ABN 48 014 914 743
For the year ended 30 June 2024

Prepared by WLF Accounting & Advisory

Statement of Comprehensive Income

LOCAL GOVERNMENT ASSOCIATION OF TASMANIA
For the year ended 30 June 2024

	NOTES	2024	2023
Income			
Grants and contributions	2	3,857,639	1,648,762
Interest income		263,908	159,356
Fees and commissions		443,910	363,492
Other income		279,605	419,984
Profit/(loss) on disposal of equipment		10,457	17,186
Subscriptions		1,354,796	1,315,336
Total Income		**6,210,315**	**3,924,116**
Expenses			
Employee benefits		1,205,849	1,324,203
Depreciation and amortisation		73,002	44,312
Grant and contribution expenses		2,120,792	392,325
Other expenses		968,806	722,994
Total Expenses		**4,368,449**	**2,483,835**
Surplus/(Deficit)		**1,841,866**	**1,440,281**
Other Comprehensive Income			
Asset revaluation reserve		879,320	-
Total Other Comprehensive Income		**879,320**	**-**
Total Comprehensive Income for the Year		**2,721,186**	**1,440,281**

The accompanying notes form part of these financial statements.

Statement of Financial Position

LOCAL GOVERNMENT ASSOCIATION OF TASMANIA
As at 30 June 2024

	NOTES	30 JUNE 2024	30 JUNE 2023
Assets			
Current Assets			
Cash and cash equivalents	3	5,663,217	7,427,600
Trade and other receivables	4	94,269	58,296
Financial assets	5	6,410,957	4,064,634
Other assets	6	282,806	61,773
Total Current Assets		**12,451,249**	**11,612,302**
Non-Current Assets			
Property, plant and equipment	7	2,483,542	1,618,513
Intangible assets	8	503	819
Total Non-Current Assets		**2,484,045**	**1,619,331**
Total Assets		**14,935,295**	**13,231,633**
Liabilities			
Current Liabilities			
Trade and other payables	9	348,243	869,466
Other current liabilities	10	4,346,710	528,774
Contract liabilities	11	281,389	200,000
Provisions	12	317,119	218,080
Total Current Liabilities		**5,293,461**	**1,816,320**
Non-Current Liabilities			
Other non-current liabilities	10	-	4,508,109
Provisions	12	102,283	88,840
Total Non-Current Liabilities		**102,283**	**4,596,949**
Total Liabilities		**5,395,744**	**6,413,269**
Net Assets		**9,539,550**	**6,818,364**
Equity			
Accumulated Surplus		8,006,017	6,164,151
Asset revaluation reserves		1,533,533	654,213
Total Equity		**9,539,550**	**6,818,364**

The accompanying notes form part of these financial statements.

Attachment to item 2.3B

Local Government Association of Tasmania
Profit and Loss (Budget Analysis)
1 July 2024 to 6 June 2025

4-000	Income	Selected Period	Annual Budget	Difference	% Difference
4-0500	Annual Conf/General Spons	108,418.18	100,000.00	8,418.18	8.42
4-0501	Annual Conf Regos	97,146.28	95,000.00	2,146.28	2.26
4-1000	Professional DMent Activities	65,759.07	60,000.00	5,759.07	9.60
4-1500	Cost Recoveries	-3,275.47		-3,275.47	
4-1505	Deposits Paid	-1,740.90		-1,740.90	
4-2000	Fees & Commissions	1,630.91	150,000.00	-148,369.09	-98.91
4-2010	Fees & Commissions Procurement	382,748.58	290,000.00	92,748.58	31.98
4-3000	Interest	186,287.04	150,000.00	36,287.04	24.19
4-3100	Interest - Building Proceeds	3,796.36	4,500.00	-703.64	-15.64
4-4000	Rentals	7,558.19	16,500.00	-8,941.81	-54.19
4-5000	Profit Sale on Plant/Equip.	25,454.55		25,454.55	
4-6000	Subscriptions	1,416,186.01	1,416,186.00	0.01	0.00
4-6505	Media Monitoring	5,680.00	4,800.00	880.00	18.33
	Total Income	**2,295,648.80**	**2,286,986.00**	**8,662.80**	**0.38**
6-0000	**Expenses**				
6-1050	Accomm exp - GMC	2,711.33	5,000.00	-2,288.67	-45.77
6-1100	Accounts Administration	17,224.98	25,000.00	-7,775.02	-31.10
6-1200	Advertising	1,646.54	2,000.00	-353.46	-17.67
6-1250	ALGA - Meeting expenses	42,640.63	25,000.00	17,640.63	70.56
6-1300	ALGA Subscription	108,222.00	110,000.00	-1,778.00	-1.62
6-1350	Annual Conference	105,400.69	100,000.00	5,400.69	5.40
6-1400	Auditors Remuneration	7,500.00	15,000.00	-7,500.00	
6-1450	Bank Fees & Gov. Charges	1,069.76	1,100.00	-30.24	-2.75
6-1500	Catering / Entertainment	5,021.52	4,000.00	1,021.52	25.54
6-1600	Cleaning and Supplies	9,844.43	12,500.00	-2,655.57	-21.24
6-1610	Community Satisfaction Survey			0.00	
6-1650	Professional Develoment Activites	39,543.30	40,000.00	-456.70	-1.14
6-1700	Consultants Fees	20,459.21	15,000.00	5,459.21	36.39
6-1705	Consultants Fees - HR/IR	6,000.00	6,000.00	0.00	0.00
6-1710	Better Councils			0.00	
6-1850	Elections - GMC Bi-annual		1,000.00	-1,000.00	
6-1900	Fringe Benefits Tax	17,640.51	20,000.00	-2,359.49	-11.80
6-2000	Depreciation Expense	49,913.02	52,000.00	-2,086.98	-4.01
6-3100	Insurance	76,812.40	85,000.00	-8,187.60	-9.63
6-3200	Land & Building Running Costs	4,614.33	6,000.00	-1,385.67	-23.09
6-3300	Loss on Write off of Equip			0.00	
6-3400	Members Emoluments	71,290.27	81,500.00	-10,209.73	-12.53
6-3410	President travel expenses	11,082.91	10,000.00	1,082.91	10.83
6-3500	Network & Internet	25,065.18	25,000.00	65.18	0.26
6-3580	Office Requisites	750.17	1,000.00	-249.83	-24.98
6-3600	Other & Miscellaneous	1,327.76	750.00	577.76	77.03
6-3800	Other Employment Entitlements	38,747.50	30,000.00	8,747.50	
6-3850	Payroll Tax	28,185.00	30,000.00	-1,815.00	-6.05
6-3900	Postage	881.98	2,000.00	-1,118.02	-55.90
6-4000	Power	2,784.60	9,000.00	-6,215.40	-69.06
6-4100	Printing & Publications	2,902.23	4,000.00	-1,097.77	-27.44
6-4120	Sector Services General	62,995.25	40,000.00	22,995.25	57.49
6-4121	Sector Services Wages	368,062.22	547,400.00	-179,337.78	-32.76
6-4122	Sector Services Super	55,209.34	82,110.00	-26,900.66	-32.76
6-4300	Rates & Land Tax	18,228.10	20,000.00	-1,771.90	-8.86
6-4310	Rentals	2,905.48	2,500.00	405.48	16.22

6-0000	**Expenses**				
6-4350	Repairs & Maintenance	1,263.09	5,000.00	-3,736.91	-74.74
6-4400	Salaries & Wages	791,635.85	937,700.00	-146,064.15	-15.58
6-4500	Software	29,751.77	28,000.00	1,751.77	6.26
6-4600	Stationery	619.39	1,000.00	-380.61	-38.06
6-4700	Subscriptions - Membership etc	8,112.11	10,000.00	-1,887.89	-18.88
6-4800	Superannuation	117,409.88	140,655.00	-23,245.12	-16.53
6-4900	Sponsorship/Research/Donations	0.00	1,500.00	-1,500.00	-100.00
6-5100	Telephone	6,960.25	7,000.00	-39.75	-0.57
6-5200	Travel - Interstate	3,733.60	2,000.00	1,733.60	86.68
6-5205	Travel - Intrastate	2,582.33	4,000.00	-1,417.67	-35.44
6-5250	Staff Training	6,801.64	10,000.00	-3,198.36	-31.98
6-6505	Media Monitoring	14,481.74	20,000.00	-5,518.26	-27.59
6-7000	Motor Vehicle Expense	11,861.83	13,500.00	-1,638.17	-12.13
6-7960	Grant Cost Recoveries	-148,819.51	-190,000.00	41,180.49	-21.67
6-7970	LGAT ASSIST - Cost recoveries	-21,560.00	-30,000.00	8,440.00	-28.13
	Expenses	**2,031,516.61**	**2,370,215.00**	**-338,698.39**	**-14.29**
	Outcome	**264,132.19**	**-83,229.00**	**347,361.19**	**-417.36**

8-0000	**Government Grants Income**	
8-1015	DPAC - Develoment Standards	$196,389.11
8-1016	DPAC - Open Spaces	$4,400,489.96
8-1020	DPAC - Communities of Practice	$110,000.00
8-1025	Resilience Canopy	$10,800.00
8-1030	CCTV Rural Towns	$132,542.30
8-1050	CCTV -Rural Towns Implementation	$2,856,583.03
8-1040	Lift the Tone	$17,070.53
8-2100	Commission of Inquiry	$603,276.21
8-2115	Population Planning & Regional Dment	$200,000.00
8-2120	Natural Disaster Risk Mment	$180,000.00
8-2500	Climate Change ReCFIT	$437,244.84
8-3180	DHHS - Health & Wellbeing 3	$212,023.50
	Total Government Grants Income	**9,356,419.48**
	Historical Grant Reserves	
8-1000	Enviro Dispute Resolution	$11,615.98
8-1011	DPAC - Worplace Health & Safety	$5,454.55
8-1500	Coastal Adaptation	9,232.37
8-2150	LG Reform Fund	$153,169.25
8-3155	Health & Wellbeing Combined	33,321.67
	Total Historical Grant Reserves	**212,793.82**
	Total Grant Funds	**9,569,213.30**
9-0000	**Government Grants Expenditure**	
9-1015	DPAC - Develoment Standards	89,811.25
9-1016	DPAC - Open Spaces	879,331.07
9-1020	DPAC - Communities of Practice	31,937.36
9-1025	Resilience Canopy	10,800.00
9-1030	CCTV Rural Towns	131,468.17
9-1050	CCTV -Rural Towns Implementation	392,525.60
9-1070	Lift the Tone	38,270.52
9-2100	Commission of Inquiry	247,582.47
9-2120	Natural Disaster Risk Mment	180,000.02
9-2500	Climate Change ReCFIT	110,313.47
9-3180	DHHS - Health & Wellbeing 3	50,182.56
	Total Government Grants Expenses	**2,162,222.49**
	Historical Grant Expenditure	
9-1001	Enviro Dispute Resolution	11,615.98
9-1011	DPAC - Worplace Health & Safety	5,454.55
9-1500	Coastal Adaptation	
9-1250	LG Reform Fund	0.00
9-3155	Health & Wellbeing Combined	0.00
9-6000	LGIT Strategies	0.00
	Total Historal Grant Expenditure	**17,070.53**
	Total Government Grants Expended	**2,179,293.02**
	Operating Profit(Loss)	**7,654,052.47**

Attachment for item 2.4

LOCAL GOVERNMENT ASSOCIATION OF TASMANIA
ESTIMATES OF INCOME & EXPENDITURE
FOR FINANCIAL YEAR ENDED 30 JUNE 2026

	2024/25	2025/26	Comparison
Income			
Subscriptions	1,416,186	1,472,833	56,647
Community Satisfaction Survey			0
Interest (Excl. Interest on grants)	150,000	175,000	25,000
Interest on Capital from Building	4,500	4,500	0
Rentals	16,500	0	-16,500
Project Admin/Cost Recovery	190,000	160,000	-30,000
Assist Revenue	30,000	25,000	-5,000
Fees and Commissions	150,000	150,000	0
Sector Services & Events			0
Annual Conference Registrations	95,000	100,000	5,000
Annual Conference Sponsorhip & Trade	100,000	110,000	10,000
General Event Sponsorship	0		0
Professional Development Activities	60,000	50,000	-10,000
Procurement - Fees and Commissions	290,000	350,000	60,000
Learning & Development		10,000	10,000
Media Monitoring	4,800	5,700	900
Total Income	**2,506,986**	**2,613,033**	**106,047**

Expenditure			
GMC Meeting Expenses	5,000	5,000	0
Accounts Administration	25,000	25,000	0
Advertising	2,000	2,000	0
ALGA Subscriptions	110,000	113,000	3,000
Auditors' Remuneration	15,000	16,000	1,000
Bank Fees and Govt Charges	1,100	1,100	0
Catering, receptions, etc	4,000	6,000	2,000
Cleaning and Supplies	12,500	11,000	-1,500
Community Satisfaction Survey	0	0	0
HR/IR Service	6,000	6,000	0
Consultants' Fees	15,000	20,000	5,000
Depreciation Building	15,000	15,000	0
Computers	9,000	15,000	6,000
Furniture & Equip	7,500	15,000	7,500
Motor Vehicles	20,000	25,000	5,000
Amortisation	500	300	-200
Donations/Research/Scholarships	1,500	1,500	0
Fringe Benefits Tax	20,000	24,000	4,000
GMC Elections - Bi-annual	1,000	0	-1,000
Insurance Crime Insurance	7,000	7,500	500
General	32,000	32,000	0
Public Liability and PI	28,750	28,000	-750
Workers Compensation	17,250	17,000	-250
Land & Building Running Costs	6,000	5,000	-1,000
Members Emoluments	81,500	85,000	3,500
Motor Vehicles - Running Costs	12,000	12,500	500
Repairs and Maintenance	1,500	2,200	700
Network and Internet	25,000	30,000	5,000
Office Requisites	1,000	1,000	0
Other and Miscellaneous	750	750	0
Other Employee Entitlements	30,000	40,000	10,000

Payroll Tax		30,000	37,000	7,000
Postage		2,000	1,500	-500
Power		9,000	5,000	-4,000
Printing and Publications		4,000	4,000	0
Rates and Land Tax		20,000	20,000	0
Rentals		2,500	3,500	1,000
Repairs and maintenance		5,000	5,000	0
Salaries	LGAT (exc Grant Staff)	937,700	936,820	-880
	Sector Services Procurement	469,700	412,662	-57,038
	Sector Services Events	77,700	101,422	23,722
	Sector Services - Learning & Development		46,305	46,305
Software		28,000	35,000	7,000
Stationery		1,000	1,000	0
Subscriptions - membership etc		10,000	10,000	0
Superannuation	LGAT (exc Grant Staff)	140,655	145,207	4,552
	Sector Services Procurement	70,455	63,963	-6,492
	Sector Services Events	11,655	15,720	4,065
	Sector Services Learning & D/Ment		7,177	7,177
Telephone		7,000	8,000	1,000
Training		10,000	10,000	0
Travelling expenses	ALGA	25,000	35,000	10,000
	Intrastate	2,000	7,000	5,000
	Interstate	4,000	4,000	0
	President	10,000	10,000	0
Sector Services	Annual Conference	100,000	110,000	10,000
& Events	Professional Development Activities	40,000	40,000	0
	Procurement	40,000	55,000	15,000
	Learning & D/Ment		95,000	95,000
	Media Monitoring	20,000	20,000	0
Total Expenditure		**2,590,215**	**2,807,126**	**216,911**
Net Result		**-83,229**	**-194,093**	**-110,864**

All figures are ex GST

LGAT 2025-2026 Subscriptions

Council	Previous year subs	Cap/Collar	2025/26 Subs overall	Adjust	Final Subs Due	$ Diff from Last FY	% Diff from Last FY
Break O'Day	37,109.99	As Calculated	40,242.38	- 48.35	40,290.73	3,180.74	8.44
Brighton	52,060.43	As Calculated	53,586.25	- 64.38	53,650.63	1,590.21	2.93
Burnie	57,613.45	As Calculated	59,330.30	- 71.28	59,401.59	1,788.14	2.98
Central Coast	57,613.45	As Calculated	59,330.30	- 71.28	59,401.59	1,788.14	2.98
Central Highlands	23,441.01	As Calculated	23,982.30	- 28.81	24,011.11	570.10	2.31
Circular Head	43,517.32	As Calculated	44,660.88	- 53.66	44,714.54	1,197.22	2.63
Clarence	79,398.38	As Calculated	81,864.65	- 98.36	81,963.01	2,564.64	3.11
Derwent Valley	41,381.54	As Calculated	42,540.00	- 51.11	42,591.11	1,209.57	2.80
Devonport	66,135.20	As Calculated	68,078.93	- 81.80	68,160.73	2,025.53	2.94
Dorset	37,109.99	As Calculated	40,242.38	- 48.35	40,290.73	3,180.74	8.44
Flinders Island	22,159.55	As Calculated	22,612.56	- 27.17	22,639.73	480.18	2.04
George Town	39,245.77	As Calculated	38,033.13	- 45.70	38,078.83	-1,166.94	-3.09
Glamorgan Spring Bay	40,893.62	As Calculated	44,660.88	- 53.66	44,714.54	3,820.92	9.21
Glenorchy	75,340.40	As Calculated	77,446.15	- 93.05	77,539.20	2,198.80	2.79
Hobart	80,252.69	As Calculated	82,792.54	- 99.47	82,892.01	2,639.32	3.16
Huon Valley	57,613.45	As Calculated	59,330.30	- 71.28	59,401.59	1,788.14	2.98
Kentish	37,109.99	As Calculated	38,033.13	- 45.70	38,078.83	968.84	2.49
King Island	23,441.01	As Calculated	23,982.30	- 28.81	24,011.11	570.10	2.31
Kingborough	71,047.49	As Calculated	77,446.15	- 93.05	77,539.20	6,491.72	9.01
Latrobe	41,381.54	As Calculated	42,540.00	- 51.11	42,591.11	1,209.57	2.80
Launceston	80,252.69	As Calculated	82,792.54	- 99.47	82,892.01	2,639.32	3.16
Meander Valley	52,060.43	As Calculated	53,586.25	- 64.38	53,650.63	1,590.21	2.93
Northern Midlands	45,653.10	As Calculated	46,958.50	- 56.42	47,014.92	1,361.82	2.86
Sorell	56,061.20	As Calculated	59,330.30	- 71.28	59,401.59	3,340.39	5.83
Southern Midlands	37,109.99	As Calculated	38,033.13	- 45.70	38,078.83	968.84	2.49
Tasman	25,077.35	Cap	27,585.09	- 35.19	27,620.27	2,542.92	10.00
Waratah Wynyard	45,653.10	As Calculated	46,958.50	- 56.42	47,014.92	1,361.82	2.86
West Coast	28,566.88	Cap	31,423.57	- 37.84	31,461.41	2,894.53	10.00
West Tamar	61,885.00	As Calculated	63,660.43	- 76.49	63,736.92	1,851.92	2.87
	1,416,186.00		**1,471,063.85**	**- 1,769.59**	**1,472,833.44**		

All figures are ex GST

LGAT ASSIST
ESTIMATES OF INCOME & EXPENDITURE
FOR THE FINANCIAL YEAR TO 30 JUNE 2026

	2024/25	2025/26	Comparison
Income			
Interest	18,000	16,000	-2,000
Interest on loans	15,000	7,500	-7,500
Assist Loan Application Fees	2,000	-	-2,000
Total Income	**35,000**	**23,500**	**-11,500**
Expenditure			
Accounts Administration	43,000	33,000	-10,000
Auditors' Remuneration	5,300	5,300	0
Bad Debts	6,000	6,000	0
Bank Fees and Govt Charges	100	75	-25
Donations/Research/Scholarships			0
Grants to members	7,000	-	-7,000
Other and Miscellaneous	100	100	0
Welfare Write Offs	200	200	0
Special Projects			0
Total Expenditure	**61,700**	**44,675**	**-17,025**
Change in net assets from operations	**-26,700.00**	**-21,175.00**	**5,525**

All figures are ex GST

Attachment to item 2.6A

Title	Governance Type	Name	Council
Animal Welfare Advisory Commmittee	Statutory	Alison Jarman	Devonport City
Family Violence Consultative Group - Ad hoc appointment	Statutory	Mary Knowles OAM	Northern Midlands
Forest Practices Advisory Council	Statutory	Jo Oliver	Other
Local Government Board	Advisory		Other
SEMC - Community Resilience and Capacity sub-committee	Sub-committee	Belinda Loxley	Kingborough
SEMC - Informed Risk Management sub-committee	Sub-committee	Karen Stone	Devonport City
SEMC - Sector Capability sub-committee	Sub-committee	Vacant	
State Fire Commission	Statutory	Vanessa Adams	Waratah-Wynyard
State Fire Commission	Statutory	Clr Peter Geard	Brighton
State Fire Management Council	Statutory	John Fisher	Other
State Grants Commission	Advisory	Greg Preece	Other
State Grants Commission	Advisory	Katherine (Kathy) Schaefer	Other
Tasmanian Heritage Council	Statutory	John Beswick	Central Coast
Tasmanian Heritage Council	Statutory	James Dryburgh	Brighton
Tasmanian Library Advisory Board	Statutory	Dick Adams	Northern Midlands
Tasmanian Library Advisory Board	Statutory	Mary Duniam	Waratah-Wynyard
Tasmanian Library Advisory Board	Statutory	Tasha Tyler-Moore	Kingborough
Tasmanian Library Advisory Board	Statutory	Ald Beth Warren	Clarence City
Tasmanian Planning Commission	Statutory	Nick Heath	Other
Tasmanian Spatial Information Council	Statutory	appointment)	Waratah-Wynyard
Tasmanian Waste and Resource Recovery Board	Statutory	Glenn Doyle	Hobart City

Attachment to item 2.6B

Local Government Representative

Committee/Board Annual Report

Committee/Board: Family and Sexual Violence Consultative Group (FSVCG

Representative: Mayor Mary Knowles OAM

Number of meetings held during 2024/2025:

- Minister's Advisor x 1.
- Tas Women in Leadership Summit planning meetings x 2.
- Panel Speaker at Leadership Summit in Hobart.
- Child Protection and FV meeting at St Helens with Senator Wendy Askew and Senator Kerrynne Liddle.
- Attended LGAT / Sexual Assault Support Service / Laurel House Regional Workshop 'Identify and Awareness of child sexual abuse', in Launceston
- Related meetings - attended three multicultural meetings (two online and one 1 in person).
- Six LGAT Health and Wellbeing online meetings.

Objectives of the Committee/Board:

To consult, inform and support the state government to implement the 3rd Family and Sexual Violence Action Plan, supported by victim-survivor experience, Our Watch, 'Let's Stop it at the Start' programs, White Ribbon and the National Plan to Reduce Violence Against Women and their Children.

Major issues dealt with, and decisions made:

- Updates + preparation for National / Tasmanian Women in Leadership Summit with guest speakers Jacinda Adern, Julia Bishop, Yvette Cehtel Women's Legal Tas, Alina Thomas Engender Equality, Leanne Nunn Psychologist and Sociologist Utas
- Panel discussion Presentation included how legislation should evolve to better protect victim survivors in workplaces, legal barriers that exist, most effective strategies for engaging small communities in gender-based violence protection
- Raising awareness of Z-cards and resources for multicultural communities
- Current legislation and process regarding the Reportable Conduct Scheme re Child Sexual Abuse – broader than suspected criminal behaviour alone

- Aboriginal cultural safety, unconscious biases and prejudices
- Child and Youth safe standards
- Prevalence of sexual violence in Australia
- Consent, grooming, impacts
- Responding, creating a child-safe environment
- Reporting considerations
- Pornography impacts, e-safety, online abuse, exploitation
- How can we help protect our kids
- Respect @ Work Report

Local Government Representative

Committee/Board Annual Report

Committee/Board: Forest Practices Advisory Council

Representative: Jo Oliver

Number of meetings held during 2024/2025: Two meetings

Objectives of the Committee/Board:

The FPAC is a part of the State's forest practices system and is to further the objective of the system, set out in Schedule 7 of the Forest Practices Act 1985, which is… *to achieve sustainable management of Crown and private forests with due care for the environment and taking into account social, economic and environmental outcomes while delivering, in a way that is as far as possible self-funding*.

FPAC is responsible for:

- *advising the FPA* (Forest Practices Authority) *on the review of the Forest Practices Act 1985 and the Forest Practices Code*
- *advising the FPA on the quality, relevance and cost effectiveness of forest practices administration, operations and research*
- *advising the FPA on financial matters including the self-funding of forest practices*
- *promoting discussion of forest practices issues*.

Major issues dealt with, and decisions made:

Due to the retirement of the Chair and the process of seeking and appointing a new chair, the FPAC has met only twice in the 2024/2025 financial year.

2 August 2024:

- Main item for discussion was the Draft FPA Strategic Plan which focussed on 4 key areas:
  1. Compliance with standards
  2. Continuous improvement
  3. Effective engagement
  4. Organisational resilience

  - FPAC members provided feedback relevant to their particular field of experience.
  - Feedback relevant to local government focussed on issues surrounding non-forestry land clearance for use and development and messaging and approach to addressing impacts on FPA compliance costs and broader community understanding of the Forestry system regulatory controls.
  - Formal communication of advice was provided to the Forest Practices Board.
- Standing items – verbal updates from the Chief Forest Practices Officer on financials and programs, FP Board communiques.
- Procedures and technical note for threatened species and soil erodibility tabled and endorsed by FPAC.
- FPAC acknowledged the service of Hans Drielsma as the chair of FPAC for 9 years.

25 March 2025:

- First meeting with the new chair Penny Wells and welcomed two new members.
- Standing items – verbal updates from the Chief Forest Practices Officer on financials and programs, FP Board communiques.
- Main item was a FPAC member roundtable discussion – refresh/revise priorities of member contributions for their relevant sectors and table general thoughts on improvements to the forest practices system. In regard to the Local Government sector, points tabled related to:
  - Clarity for community in regard to land clearing and regulatory thresholds;
  - Collaboration on mutually reinforcing information portals that the general public can understand will assist both landowners and the FPA in regard to compliance costs;
  - Look at the potential to make opportunities for technical training on cross-sector matters such as land management for bio-diversity, soils and erosion, karst, available to local government officers as well as forest practices officers, as the programs appear to be of high quality and would be of high interest and value to those local government officers involved in land use management.

Local Government Representative

Committee/Board Annual Report

Committee/Board: State Grants Commission

Representative: Greg Preece and Kathy Schaefer

Number of meetings held during 2024/2025: Four plus electronic council hearings and visits.

Objectives of the Committee/Board

The State Grants Commission is an independent statutory body responsible for recommending the distribution of Australian Government Financial Assistance Grant funding to Tasmanian councils. The Commission also recommends the distribution of the amount allocated by the Tasmanian Government to councils from heavy vehicle motor tax revenues.

The State Grants Commission consists of three members. Two of those members are nominated from local government and the third is an independent chairperson nominated by the Department of Treasury and Finance and approved by the Treasurer.

Current members of the Commission are Chris Lock (Independent Chairman), Greg Preece and Kathy Schaefer.

Major issues dealt with, and decisions made

In the 2024-25 financial year, Tasmania's entitlement of FA Grant funding was $101,760,569 consisting of Base Grant funding of $48,383,968 Road Grant funding of $53,376,601.

In March 2025, the States Grants Commission conducted its annual hearings and visit program with Tasmanian councils. All councils were approached, and the Commission visited seven councils and held virtual hearings with a further sixteen councils.

The Commission has undertaken the following activities during the past 12 months:

- Provided workshops to four councils which explains the approach to preparing its Financial Assistance Grants recommendations.
- Implemented changes to the allocation of the Base Grants to councils on a per capita basis and used the service population in lieu of resident population.

- Adopted the asset preservation cost estimates and annual indexation method for the three road classes (i.e. urban sealed, rural sealed and unsealed); and a single rate for bridges and culverts regardless of the construction type, which replaced the six different rates previously used by the Commission.

- Made recommendations to the Treasurer for the distribution of Australian Government Financial Assistance Grants and Heavy Motor Vehicle Tax Revenue to local councils.

- Published its 2024-25 to 2026-27 Strategic Plan, which outlines its aims and priority activities over the next three years.

Local Government Representative

Committee/Board Annual Report

Committee/Board: SEMC – Informed Risk Management sub committee

Representative: Karen Stone (Devonport City Council)

Number of meetings held during 2024/2025: Four

Objectives of the Committee/Board:

- Facilitate collaborative and cohesive proactive action in the face of all hazards
- Identify agreed priorities and develop annual plan actions
- Support shared responsibilities
- Facilitate initiatives to pursue agreed priorities and actions
- Report to SEMC and support continuous improvements relating to community disaster resilience.

Major issues dealt with, and decisions made:

- Reviewed Informed Risk sub committee Terms of Reference
- Reviewed the Tasmanian Residual Disaster Risk Register and in particular risk treatments (ongoing)
- Presentation from Victoria's Department of Energy, Environment & Climate Adaptation on Power outage Victoria Feb 24
- Updates provided on available grant funding opportunities
- Reviewed SEMC Sub Committee priorities list
- Updates and input into the Risk Information Portal development
- Reviewed discussion paper on Tasmania’s next Disaster Resilience Strategy.

I am participating in the Risk Information Portal Tasmania (RIPT) development working group Terms of Reference have been developed for the Project Working Group.

The RIPT project will provide a cohesive framework and tools for local government and emergency management agencies to streamline disaster risk assessment information into high-quality data within a single accessible portal.

RIPT Project Workshop held 28 April 2025

Local Government Representative

Committee/Board Annual Report

Committee/Board: State Fire commission

Representative: Councillor Peter GEARD, General Manager Vanessa Adams

Number of meetings held during 2024/2025: 12

Objectives of the Committee/Board:

The State Fire Commission provides strategic oversight and direction to the Tasmanian Fire Service and SES.

Major issues dealt with, and decisions made:

Annual Report, Budget, and Corporate Plan discussed and endorsed, alongside regular financial and performance reporting.

Oversaw and supported major culture review which is currently commencing implementation.

Endorsed various infrastructure projects including improvements to Fire Stations, leases, and sale of land. The SFC attended the opening of new fire stations at Marrawah and Campbelltown

Received regular updates on policy improvements, Child Safe Framework implementation, fire permits and workforce planning. This included an increase to the 2025 firefighter recruit course from 18 to 24 based on known and predicted demand requirements.

The SFC Reviewed the State Fire Protection Plan which is maintained by TFS on behalf of the State Emergency Management Committee.

Following the implementation of the Tasmanian Child Safe Framework, reviewed the deployment of TFS juniors and cadets and underage fire fighters to incidents and their participation in live fire training with the outcome that they are no longer being deployed to emergency incidents and live fire training has been suspended pending increased operational controls.

A systematic review of the TFS' RTO's operations highlighted the Commission's commitment to evidence based, high quality training and assessment for both career and volunteer members, that is nationally recognised. This also supports Strategic Action Plans on structure and governance, and compliance with overarching policies, standards, legislation and regulations.

Local Government Representative

Committee/Board Annual Report

Committee/Board: State Fire Management Committee

Representative: John Fisher

Number of meetings held during 2024/2025: Four

Objectives of the Committee/Board:

The State Fire Management Council (SFMC) is an independently chaired body established under Section 14 of the *Fire Service Act 1979*.

The mission of SFMC is to enhance the efficient management of bushfire related risk in Tasmania in order to protect life, property and significant community values.

SFMC provides advice to the Minister for Police, Fire and Emergency Management and State Fire Commission about vegetation fire management across Tasmania, particularly in the areas of prevention and mitigation of fires.

The SFMC Strategic Direction Framework focuses on:

- **Research and Innovation;** by supporting and promoting bushfire research and innovation,
- **Policy;** by providing evidence based public policy advice and information
- **Community Capacity and Awareness;** by building community capacity and awareness to support bushfire resilient communities.
- **Communication and Collaboration**; through building and supporting public and private sector partnerships and collaboration.
- **Vegetation Fire Management Planning;** by enabling strategic, effective and collaborative vegetation fire management planning in Tasmania.
- **Governance;** facilitating efficient and effective governance and resource management.

Major issues dealt with and decisions made:

Fire and Emergency Services Act Review
The State Fire Management Committee made numerous representations to the Government on the Fire Services Act Reforms and provided written advice and briefings to the Minister on the SFMC perspective of how the Tasmania Fire and Emergency Services Draft Bill could be improved.

Bushfire Risk Management Plans
The SFMC reviewed the Bushfire Risk Management Plan Guidelines and provided a revised draft for comment to stakeholders. The revised BRMP Guidelines were endorsed by the Committee and published for each Fire Management Advisory Committee to use to prepare their Bushfire Risk Management Plans. Local BFMC with the aim to integrate actions across tenure and between agencies.

The annual review of the BFMC Bushfire Risk Management Plans was undertaken by the SFMC with the final plans endorsed and published as required by the Act. The plans define the strategy proposed to reduce the risk of bushfire impact in each BFMC area and identify how each land manager deals with bushfire risk on their holding and also provides for the integration of risk management actions to more effectively produce a network of risk reduction measures to protect life, property and the environment.

Fire Trail Standards
A multiagency working group reviewed current fire trail standard guidelines from Tasmanian land management agencies and those prepared in other States such as NSW and Victoria. The Working Group prepared a set of fire trail standards for Tasmania for endo rsement by the SFMC which provides for:

- Standards for the construction and maintenance of fire trails for each category of fire appliance,
- Defines the minimum surface and gradient standards required for fire trails to enable rapid and safe access to the fireground for firefighting vehicles,
- Defines the minimum requirements for turn around bays, corner radius and vegetation clearances that will ensure appliances using the fire trails can escape a fireground safely if required to do so,
- Provided a standard signage palette and design for fire trail and infrastructure identification for land managers.

Red Hot Tips Program
The SFMC operates the Red-Hot Tips program for landholders to enhance their skills in undertaking hazard reduction burns and to build confidence in land holders to undertake these essential works.

The program report identifies the success of the program in delivering important fuel reduction works on private land and contributes significantly to the State total risk reduction works in a land category that is in close proximity to human settlement areas and assets.

Local Government Representative

Committee/Board Annual Report

Committee/Board: Tasmanian Heritage Council

Representative: James Dryburgh (LGAT Representative with technical expertise in planning) and Cr John Beswick (LGAT Representative)

Number of meetings held during 2024/2025:

Six board meetings, one strategic day and other informal activities and events

---

Objectives of the Committee/Board

- Identifying and assessing places of historic heritage significance for entry in the Tasmanian Heritage Register.
- Reviewing works to places entered on the Tasmanian Heritage Register to ensure that the heritage values are protected.
- Providing strategic guidance on the management of historic heritage in Tasmania.

Major issues dealt with, and decisions made

- Establishment of new Statement of Expectation from the Minister post State election.
- Review and renewal of Strategic Plan and Annual Plan.
- Launched digital transformation project for the Heritage Register, including it now being available on the LIST as a searchable (including by LGA) database of the entire register. The platform is enjoying high levels of engagement.
- Submissions regarding proposed legislative changes and their potential impacts on the protection, management and benefits of historic heritage in Tasmania, including with regard to proposed creation of Development Assessment Panels.
- Submissions to the PoSS process for the stadium at Macquarie Point.
- Other high-profile assessments and decisions have included those for the Crowther Statue, the St Johns Precinct and the Strahan Visitors Centre.
- A range of new sites have been added to the Heritage Register, some sites have been removed, and a number of sites have had their listing refined or amended.

Local Government Representative

Committee/Board Annual Report

Committee/Board: Tasmanian Library Advisory Board

Representative: Mayor Dr Mary Duniam, Councillor Dick Adams, Tasha Tyler-Moore, Alderman Beth Warren

Number of meetings held during 2024/2025: Five

Objectives of the Committee/Board

- Promoting universal literacy, including digital, media and information literacy and skills, with the support of dedicated staff;
- Closing gaps in access to information and helping government, civic society and business to understand local information needs better management;
- Providing a network of delivery sites for government programs and services;
- Advancing digital inclusion through access to ICT;
- Serving as the heart of the research and academic community; and
- Preserving and providing access to the world's culture and heritage.

Libraries Tasmania comprises the State Library, Tasmanian Archives, Government Records, the Allport Library and Museum of Fine Arts, 45 public lending libraries statewide (plus a library for prisoners at Risdon Prison and a digital access centre on Bruny Island) and the 26TEN team. Individually and as a whole, these units contribute to the United Nations Sustainable Development Goals: Goal 4 – Quality Education; Goal 5: Gender Equality; Goal 10: Reduced Inequalities; Goal 16: Peace, Justice & Strong Institutions; and Goal 17: Partnership for the Goals.

Tasmanian Library Advisory Board Strategy 2024-2027

Purpose:
To champion outstanding library and archive services for Tasmania, now and into the future.

Goal 1: Quality, informed advice to the Tasmanian Government and Libraries Tasmania.
Goal 2: Effective advocacy in support of Libraries Tasmania
Goal 3: Contribution to related Tasmanian Government priorities.

Major issues dealt with, and decisions made

Fellowships: 2025 Library Fellowships included two Writing Fellowships and one Aboriginal Fellowship, as well as the Research and Creative Fellowships. While applications for these Fellowships were of high quality, there were fewer applications than last year.

Aboriginal Engagement and Libraries Tasmania: TLAB progress against improving Aboriginal engagement in the Library's Strategic Directions and commitments noted to improve the cultural safety of Libraries Tasmania's collections and spaces. Libraries Tas intends to refresh its Raising the Bar action plan for 2024-2025.

Collection Acquisition Presentations: The Board viewed a selection of recent acquisitions, for example items relating to Polar and Acratic exploration with emphasis on the role of community archives at Libraries Tasmania. Community archives are not widely understood by the community, and Libraries Tasmania is planning to recruit additional Community Archives staff in 2025.

Key Trends: Online visits are stable while membership, program attendance, and loans continue to rise. Adult Literacy Service clients are decreasing as are volunteers across the organization. There is a discrete project in the Lifting Literacy Implementation Plan about youth. There have been changes to opening hours, with Launceston and Hobart libraries now open on Sundays; and New Norfolk, Smithton and Georgetown libraries are open on Saturdays. Attendance numbers have been steadily increasing since the opening hours have been extended.

Tasmania Reads Week 2025: There are a diverse range of events, activities and opportunities to promote local talent. This is also an opportunity for the Board Members to be involved by hosting a Book Chat in the community, promoting the program on social media, or attending an event as a reader or emcee.

State Library and Archives Engagement Plan: Elements of the Plan include redesigning State Library spaces, and engagement activities including Tasmanian Voices talks.

Understanding Australian Readers: It was identified that Libraries Tasmania need to work with schools and its relationship with good teaching models in schools.

Libraries Tasmania Risk Framework: Libraries Tasmania is currently reviewing the Risk Register to include cybersecurity, occupational violence and psychosocial hazards, recruitment and staffing and social license. A separate policy will be developed for the Risdon Prison Library as the reading space is managed by the Prison.

(Further information can be obtained from: https://libraries.tas.gov.au/news/)

Local Government Representative

Committee/Board Annual Report

Committee/Board: Tasmanian Planning Commission

Representative: Nick Heath

Number of meetings held during 2024/2025: 11

Objectives of the Committee/Board

The Commission's current roles include:

- Assessing amendments to the Local Provisions Schedules of the Tasmanian Planning Scheme and interim planning schemes.
- Providing planning advice to the Minister for Housing, Planning and Consumer Affairs.
- Assessing major projects and projects of State significance.
- Reporting on draft State Policies.
- Assessing the Local Provisions Schedules of the Tasmanian Planning Scheme.
- Assessing and advising on the State Planning Provisions and Planning Directives.
- Reviewing reports and representations on draft management plans.

Major issues dealt with, and decisions made

- Considered and determined applications for Planning Scheme amendments.
- Continued process of receiving and assessing of draft Local Planning Scheme provisions.
- Appointed Panels and/or received regular updates on the progress on Major Projects, including the new Bridgewater Bridge, the North East Wind Farm, the North West Transmission Lines Upgrades, the Bell Bay Windfarm, the Kangaroo Bay Hotel, the Whaleback Ridge Renewable Energy project, the Cellars Hill Wind Farm and the Macquarie Point Multipurpose Stadium Project of State Significance.
- Completed the 2024 State of the Environment Report and lodged the report with the Minister for Planning in August 2024.
- Completed assessments of the amendments to the State Planning Provisions.

- Made comments on State Government consultation papers, including the proposed Development Assistance Panels Bill (twice), extensions to the Southern Tasmanian Regional Land Use Strategy Urban Growth Boundary and the draft Agricultural Workers Accommodation document.
- Ongoing review of the Commission's operating procedures.

Local Government Representative

Committee/Board Annual Report

Committee/Board: Tasmanian Waste and Resource Recovery Board

Representative: Glenn Doyle

Number of meetings held during 2024/2025:

9 Full Board Meetings
6 Finance & Governance Committee meetings (as Chair)
16 Site visits/ briefings/ workshops

Objectives of the Committee/Board

Established under section 10 of the *Waste and Resource Recovery Act 2022*, the Tasmanian Waste and Resource Recovery Board. in the performance of its functions, the Board is to:

- Further the improvement of waste management and waste recovery; and
- Further the objectives of the State's resource management and planning system as set out in Part1 of Schedule 1 to the Environmental Management and Pollution Control Act 1994.

Major issues dealt with, and decisions made

The Tasmanian Waste and Resource Recovery Board (WRRB) has had a busy year finalising its establishment to ensure appropriate governance, risk management and strategic planning processes are in place.

- The WWRB approved the flow of funding for the three regional waste organisations, noting the funding is derived from the waste levy and is based on waste volumes. The regional waste organisations are all now delivering programs utilising this funding.
- The WRRB ensured the dissemination of the waste levy via the following range of grant funding programs:

  Administration of round one of the High Priority Infrastructure Grants Program with $3.5M allocated.

  Round two of the High Priority Infrastructure Grants Program is now open for application.

  - Planning for round three of the High Priority Infrastructure Grant Program is nearing finalisation and will be available soon.

  - Funding has been provided via the Remote Councils Assistance Program.
  - Assistance has been made available for exceptional circumstances and adverse impacts support, including flood and fire.
  - The Public Authority Dumping Rebate is in place.
  - The Resource Recovery Facility Levy Rebate is in place to help keep recycling gate fees down.
  - Funding for a School's Program has been allocated.
  - The Charitable Recyclers rebate Program is in place and available.

- Other grant funding programs, including community grants and a repair program have been approved and will be available in the near future.
- The WRRB has approved the establishment of a scholarship program, details will soon be available.
- Considerable effort was made by the WRRB to revitalise ReThink Waste. This platform, owned by Local Government now has certainty with recurrent funding approved.

  The WRRB worked closely with the Regional Waste Organisations resulting in the appointment of a dedicated Program Coordinator and the establishment of a delivery plan to provide consolidated and uniform waste and resource recovery education, information, and initiatives.
- The WRRB funded a charitable re-use study. This study recently launched provides information on the volume of material be reused in the charitable sector and includes the availability of a calculator for use by Councils.
- There is an ongoing emphasis to improve the accuracy of data offering detail on waste management, material recovery and the circular economy in Tasmania.
- The WRRB has also approved the process for the review of the inaugural Tasmanian Waste management Strategy, this work will be progressed over the coming year.

Motions tabled at LGAT General Meetings by Northern Midlands Council

Updated April 2024

03/2024	That LGAT lobby the State Government to: a) provide an accessible online user interface for purchasers, residents and developers to all available flood mapping in populated areas in Tasmania; b) assist Tasmanian councils to flood map low lying land, inclusive of climate change impact, so the effect flooding could have on property, including future developments, renovations and subdivisions is known statewide; and c) require all councils to include flood mapping in the issuance of any Form 337 and any other such forms as appropriate.	Carried
03/2024	That LGAT lobby the State Government: • To amend legislation to include electricity generation and storage plant and equipment in capital valuation (as occurs in Victoria) and to allow energy sector developments to make appropriate payments in lieu of rates under a regulated formula subject to indexation consisting of a fixed payment per site and a variable payment based on installed capacity. • That applicable developments subject to the rating policy amendments will include all current electricity generation and storage developments under existing technologies, as well as future generation and storage developments under existing and new technologies. • Consider the means by which Councils located within reasonable proximity of energy sector developments in unincorporated areas that impact infrastructure and service provision are appropriately compensated via similar payment arrangement to ensure ratepayers are not financially impacted by these developments. **Motion considered:** That LGAT lobby the State Government: 1. To amend legislation to include electricity generation and storage plant and equipment in capital valuation (as occurs in Victoria) and to allow energy sector developments to make appropriate payments in lieu of rates under a regulated formula subject to indexation consisting of a fixed payment per site and a variable payment based on installed capacity. 2. That applicable developments subject to the rating policy amendments will include all current electricity generation and storage developments under existing technologies, as well as future generation and storage developments under existing and new technologies. 3. Where a Council's infrastructure and service provision is impacted by energy sector developments, consider the means for appropriate compensation via similar payment arrangements to ensure ratepayers are not financially impacted.	Carried
03/2024	That LGAT lobby the State Government to establish a Statewide Tyre Recycling facility to process end-of-use tyres.	Withdrawn

Call for Submission of Motions

Councils are invited to submit motions for debate

to be Included at General Meetings

Name of Council :.....

Contact person (name, title) .....

Phone: ..... **Email:**.....

Date of General Meeting for Motion to be Included.....

Motion Requirements:

In order for a Motion to be considered please indicate if the proposed Motion:

- ☐ **Addresses the objectives of the Association[1].**
- ☐ **Concerns a local government matter.**
- ☐ **Is a matter of common concern to councils and not a specific local issue.**
- ☐ **Is linked to LGAT's current Annual Plan, available here**
- ☐ **Is not an existing resolution of the sector (please refer to the Follow up of Resolutions Report in the preceding General Meeting for a list of current resolutions).**
- ☐ **Has not been considered at a General Meeting in the 12 months prior.**
- ☐ **Relates to existing, or sought activities/policy of the Tasmanian Government and would benefit from members understanding the Tasmanian Government position prior to considering[2].**

LGAT staff are happy to assist you in developing your motion. Please phone 03 6146 3740 in the first instance.

Please attach –

The proposed Motion, which should clearly articulate the action required of LGAT or the policy position being sought from the sector.

The attachment should also include additional background comments to ensure members have a complete understanding of what is being sought and how the Motion addresses the requirements listed above.

Email to admin@lgat.tas.gov.au

[1] The objectives of LGAT are

(a) Protect and represent the interests and rights of Councils in Tasmania;

(b Promote an efficient and effective system of local government in Tasmania; and

(c) Provide services to Members, councillors and employees of Councils.

Details of Motion

Motion Title .....

Decision Sought

Background Comment